Diamond Chain Harrow

Assembly and Parts Manual

Model 45

Revised March 2015

Kelly Engineering
PO Box 100
Booleroo Centre SA 5482
Australia

Phone: + 61 8 8667 2253
Fax: + 61 8 8667 2250
Email: office@kellyengineering.com.au
Website (US): www.kellyharrows.com
Website (Australia): www.kellyengineering.com.au

Thank you for choosing a Kelly Engineering product

We trust the following manual should be clear and easy to follow, however feel free to contact our company for customer support.
(details below)

Should you have any problems or wish to suggest any improvements or modifications that would help to improve our products please contact us.
We welcome feedback.

Parts can be purchased when required through your local dealer, or by contacting either Kelly Engineering in Australia or in the US, Hood & Company Inc.

Kelly Engineering
Phone: + 61 8 8667 2253
Fax: + 61 8 8667 2250
Email: office@kellyengineering.com.au
Website (Australia): www.kellyengineering.com.au
Website (US): www.kellyharrows.com

Hood & Company Inc Springfield MO
Phone: 417 865 2100
Fax: 417 865 2105
Email: hoodco@hoodco.com

Contents

	Page no
Section 1: Unpacking	**4**
Section 2: Parts	**7**
Section 3: Diagrams and charts	**52**
Overview	53
Chains	54
Hydraulics	56
Hydraulic fitting identification	57
Hydraulic layout	58-59
Hydraulic detail	60-66
Hose layout	67
Wiring diagram	68
Mounting swivels	69
Fitting cast link retaining pins	70
Specifications	71-72
Section 4: Operation	**73**
Basic operation and chain tension	74
Module and chain tension	75
Correct working height	76
Assembly Updates	77

Section 1
Unpacking

Unpacking

We recommend that a crane and forklift truck be available for unloading and assembly

- Before opening shipping container inspect exterior for any damage. Remove seal and open container doors.

CAUTION

Take care when opening doors as load may have shifted or restraints may have broken.

- Remove boxes from doorway of container one at a time using a forklift truck. Each box weighs approximately 2600 lbs 91200kg)
- Check strapping on each bundle before attempting to remove
- Attach chains to the packing frame using shackles and using suitable equipment (eg. fork-lift or tractor) drag framework bundles out of container. To move bundles away from front of container lift from side with forklift. Do not lift under angle iron frame, lift only under centre frame. Each bundle weighs approximately 7000 lb (3200 kg).

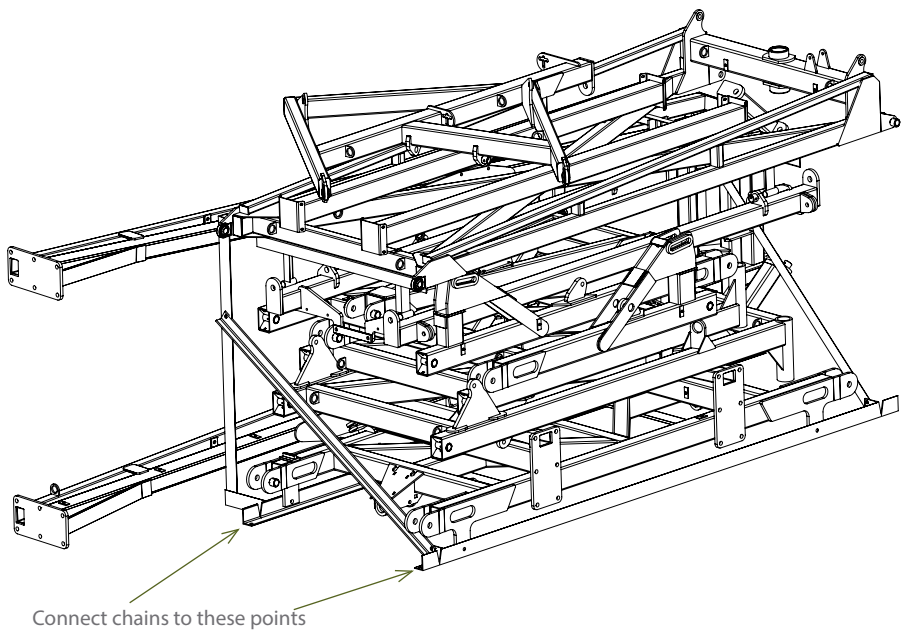

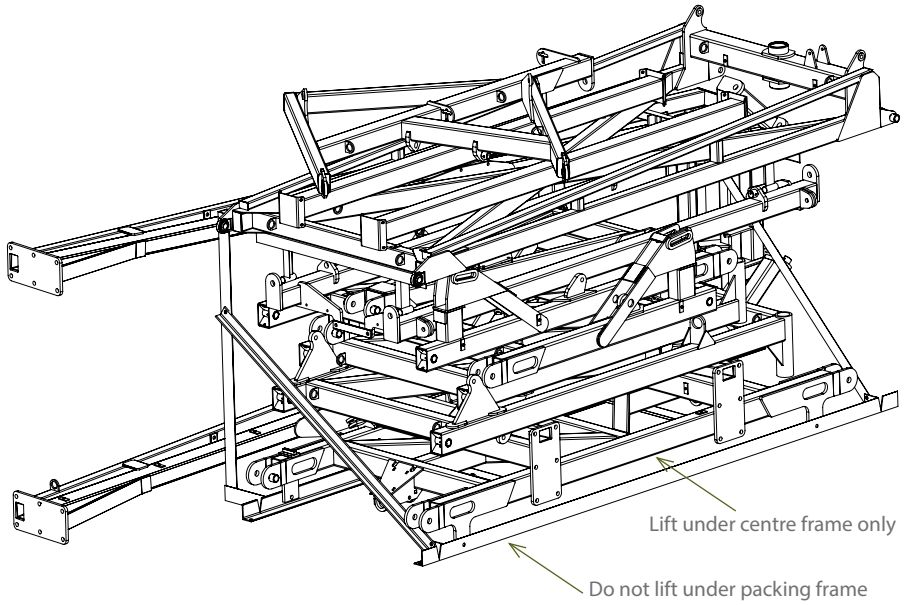

CAUTION

Before cutting straps attach slings or chains and take the weight of the frames to avoid them slipping or falling and causing injury.

CAUTION

Wear eye and hand protection when cutting straps. Sharp edges are exposed as straps separate and may cause injury.

CAUTION

To avoid falling or moving components, before cutting straps attach slings or chains to individual pieces and only cut the straps holding the piece to be lifted.

- Remove boxes from rear of container one at a time using a forklift truck. Each box weighs approximately 2600 lbs (1200 kg)
- Identify parts for each machine by serial no. or description and separate. Open parts box and check that all parts are accounted for against checklist
- Cut straps holding bundles and separate parts and place in assembly area
- Once all parts have been identified machines are ready for assembly
- Read assembly instructions before proceeding.

Section 2
Parts

PART NUMBER	DESCRIPTION	QTY.
0845-01	45'/45R Centre Frame	1
0733-SH275966205	2.75"R 6 Tonne on 205mm PCD Hub Complete	2
0211-20150	M20 x 150 8.8 zp Bolt	2
0221-NYL20	M20 Nyloc Nut	2

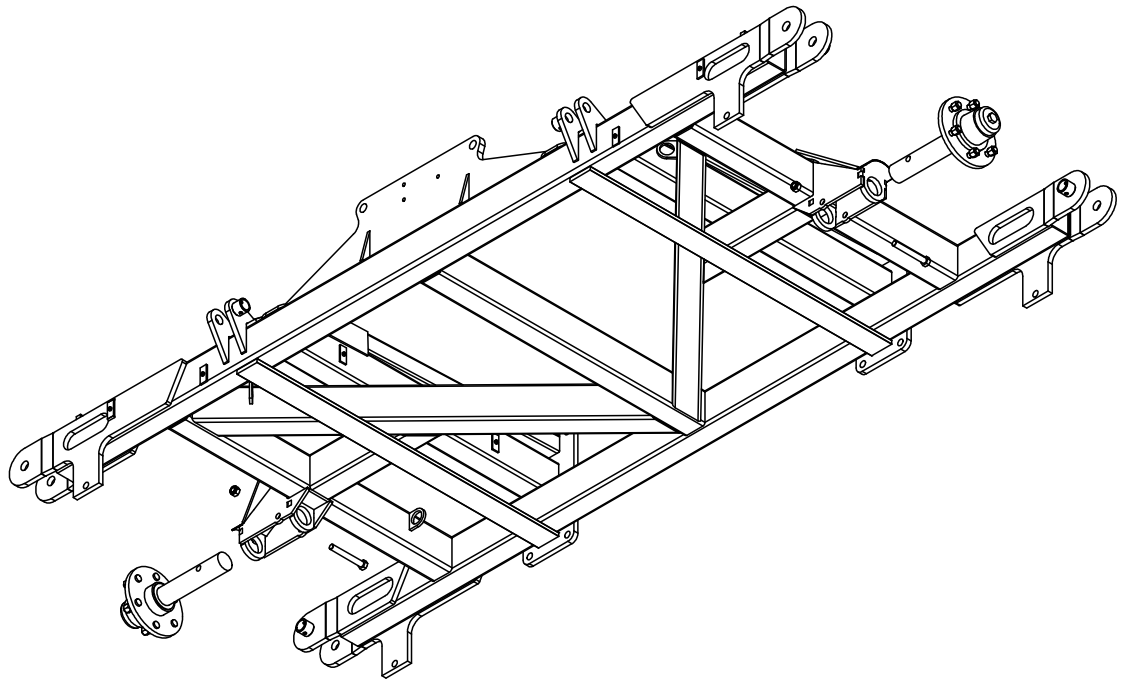

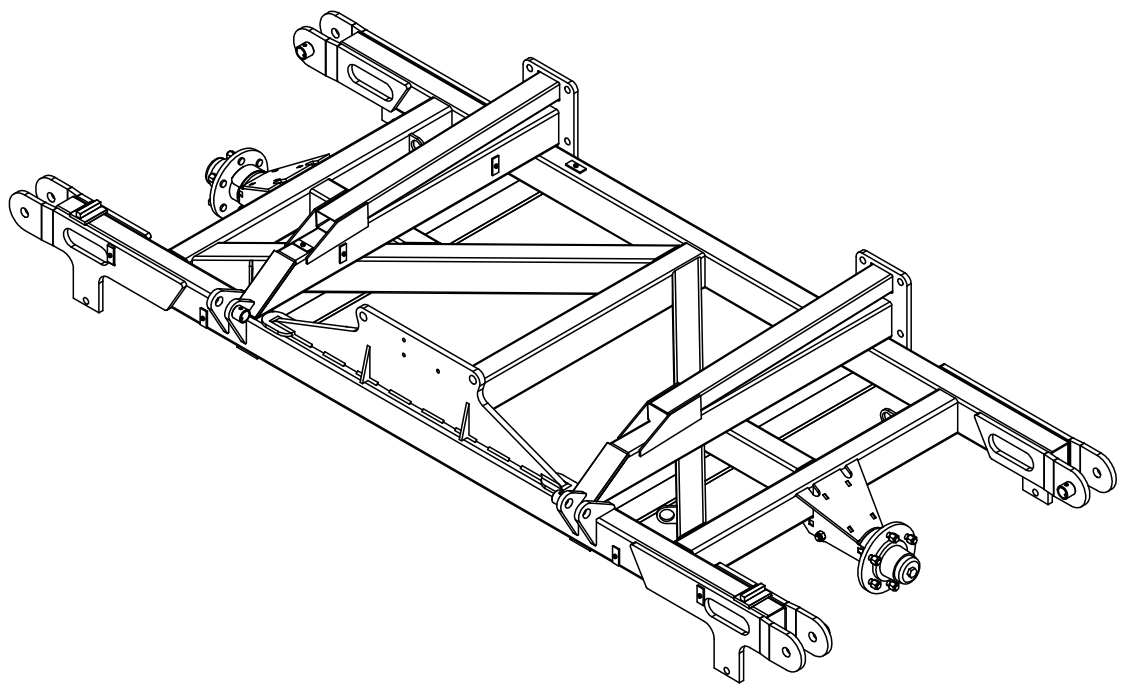

TRAVEL

PART NUMBER	DESCRIPTION	QTY.
0181-GN1-845	Grease Nipple 1/8" BSP 45 Deg	2
0845R-04	45 Rice RH Inner Wing Frame	1
0113-MB 3550DX	35 ID x 50mm DX Bush	4
0801-10-08-235	PCH Wing Pivot Pin	2
0211-1265	M12 x 65 8.8 zp Bolt	2
0221-NYL12	M12 Nyloc Nut	2
0261-PINC1363	Cotter Pin M13 X 63mm	2

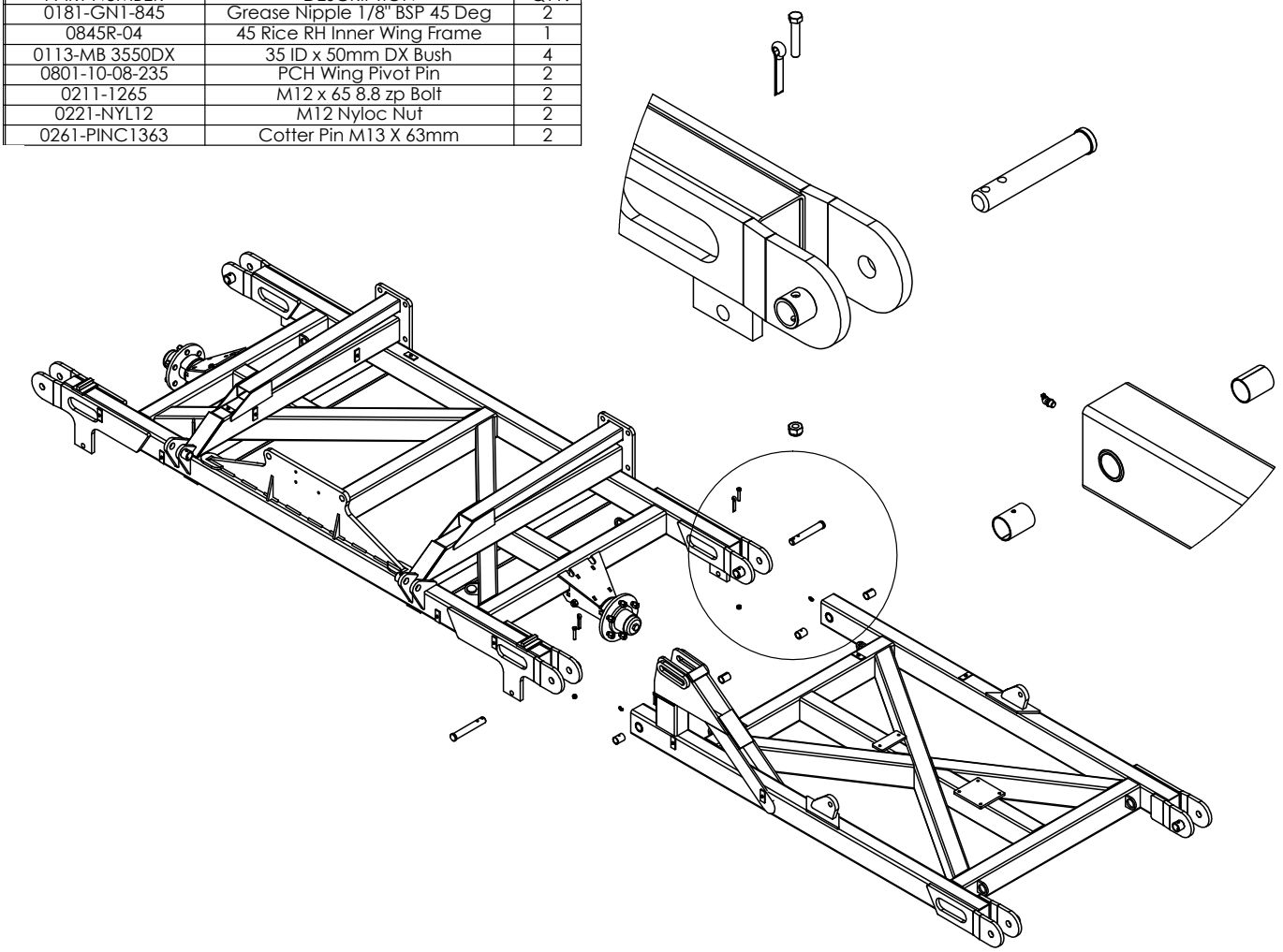

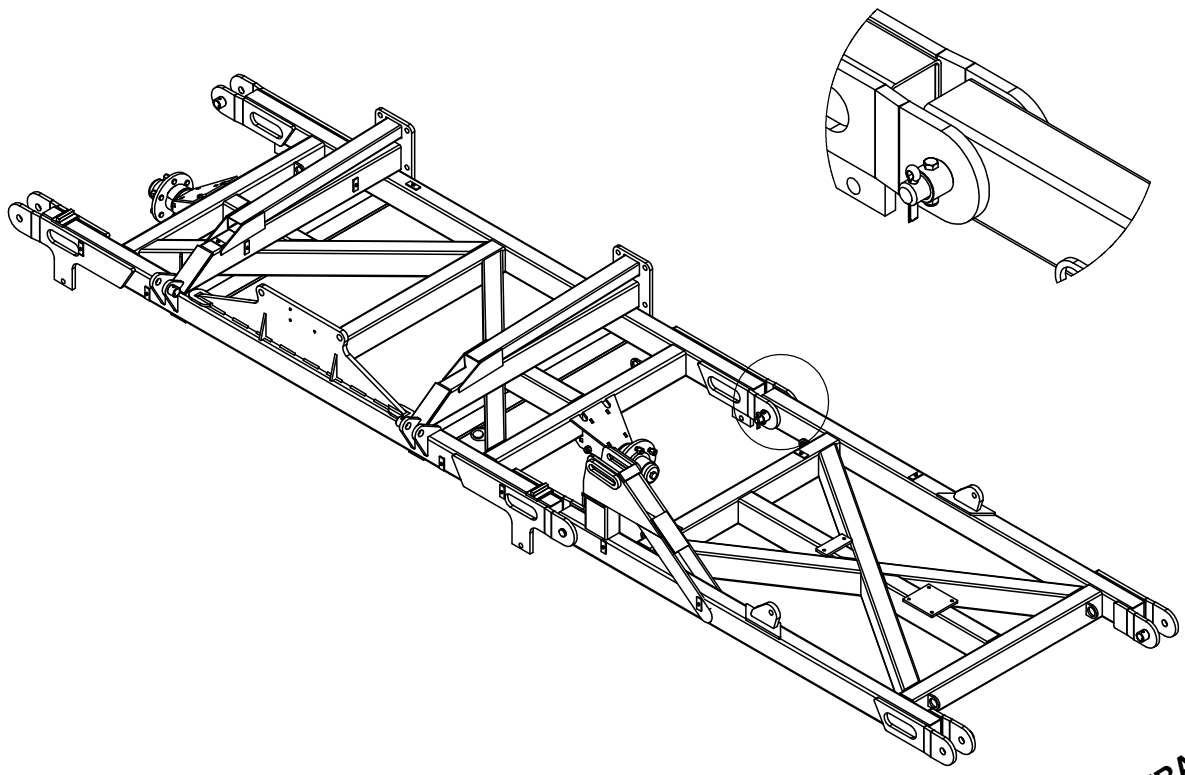

PART NUMBER	DESCRIPTION	QTY.
0845R-04P	45R Inner Wing post	1
0211-1240	M12 x 40 8.8 zp Bolt	6
0221-NYL12	M12 Nyloc Nut	6

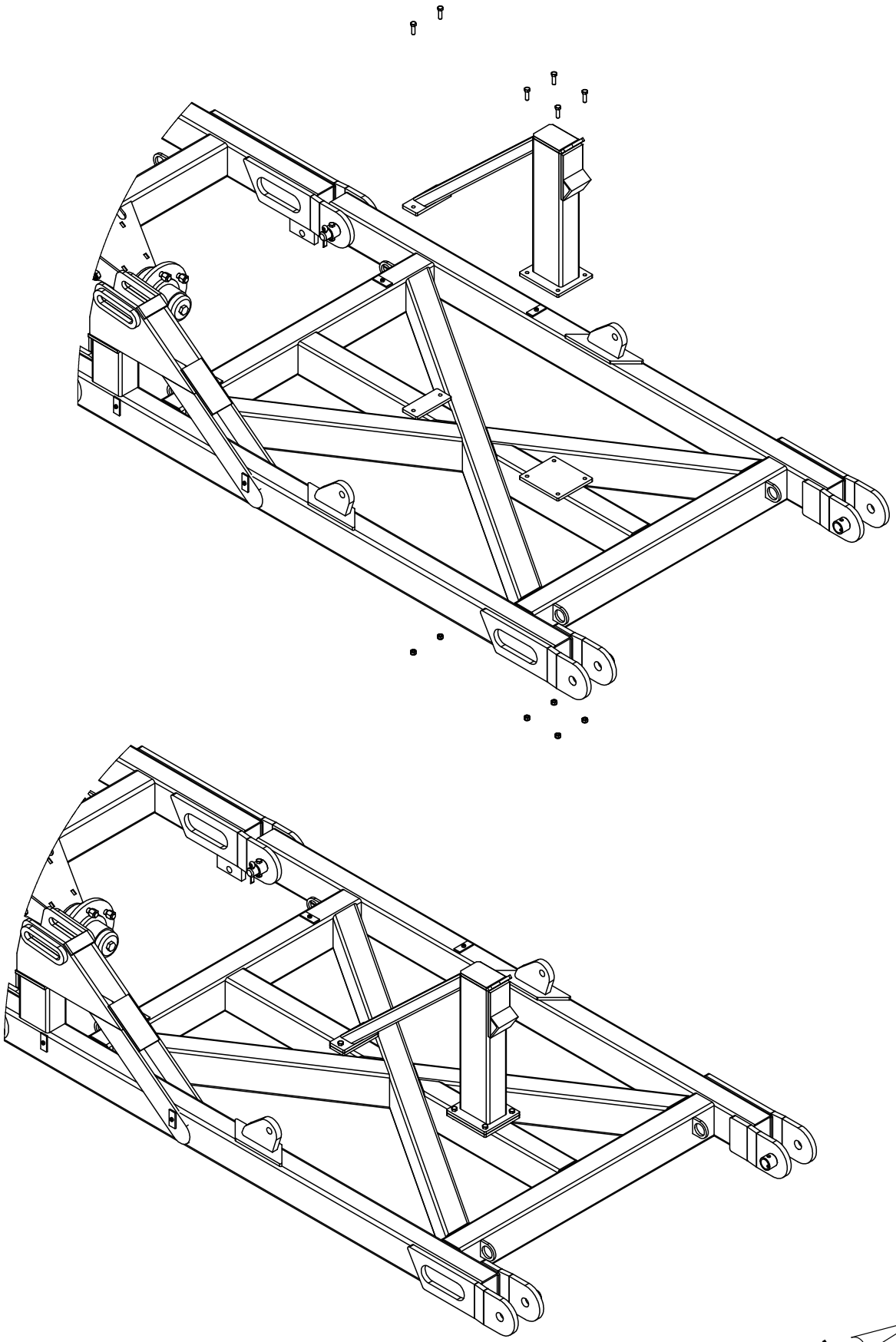

PART NUMBER	DESCRIPTION	QTY.
0181-GN1-845	Grease Nipple 1/8" BSP 45 Deg	2
0113-MB 3550DX	35 ID x 50mm DX Bush	4
0801-10-08-235	PCH Wing Pivot Pin	2
0845-05	45'/45R LH Inner Wing Frame	1
0211-1265	M12 x 65 8.8 zp Bolt	2
0221-NYL12	M12 Nyloc Nut	2
0261-PINC1363	Cotter Pin M13 X 63mm	2

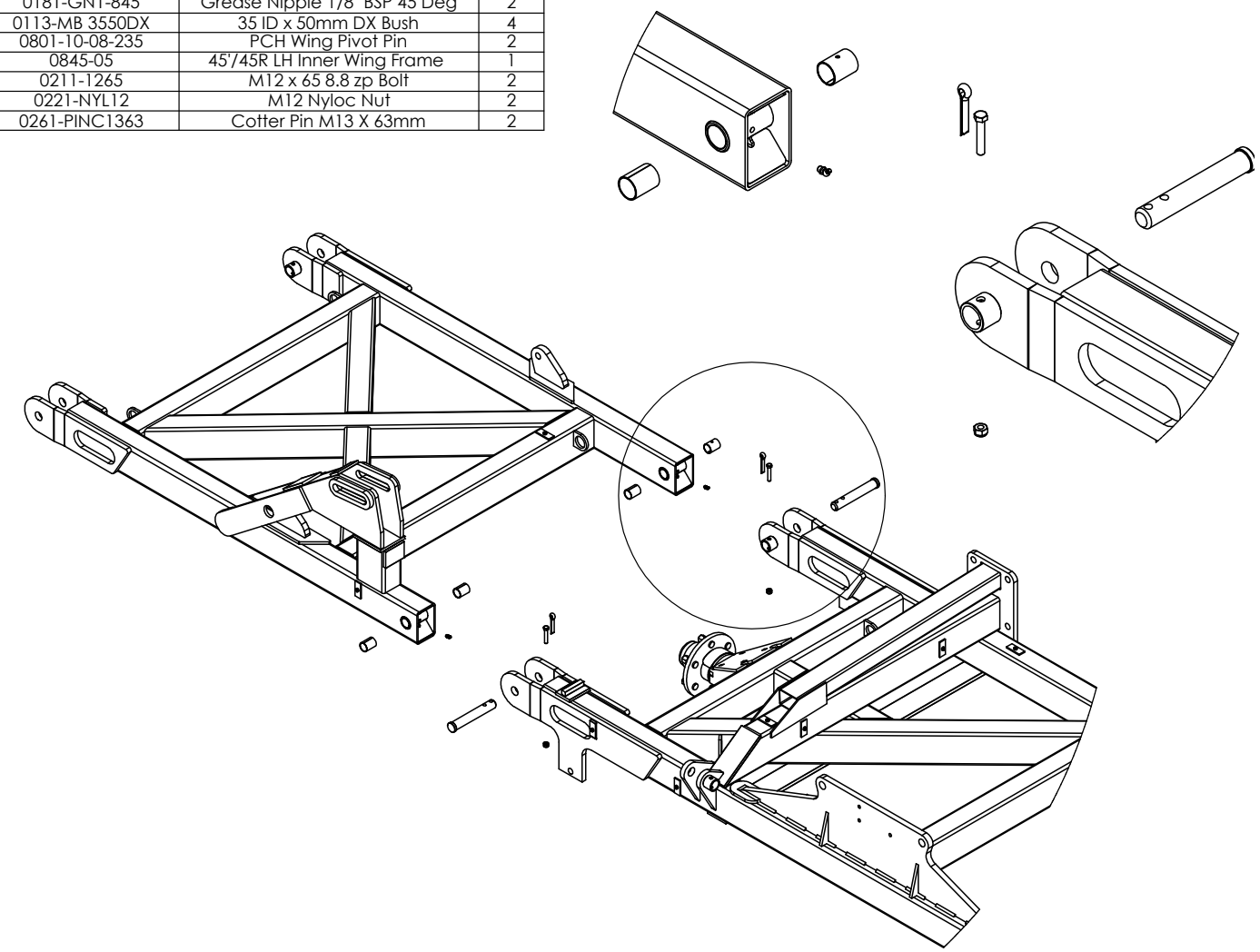

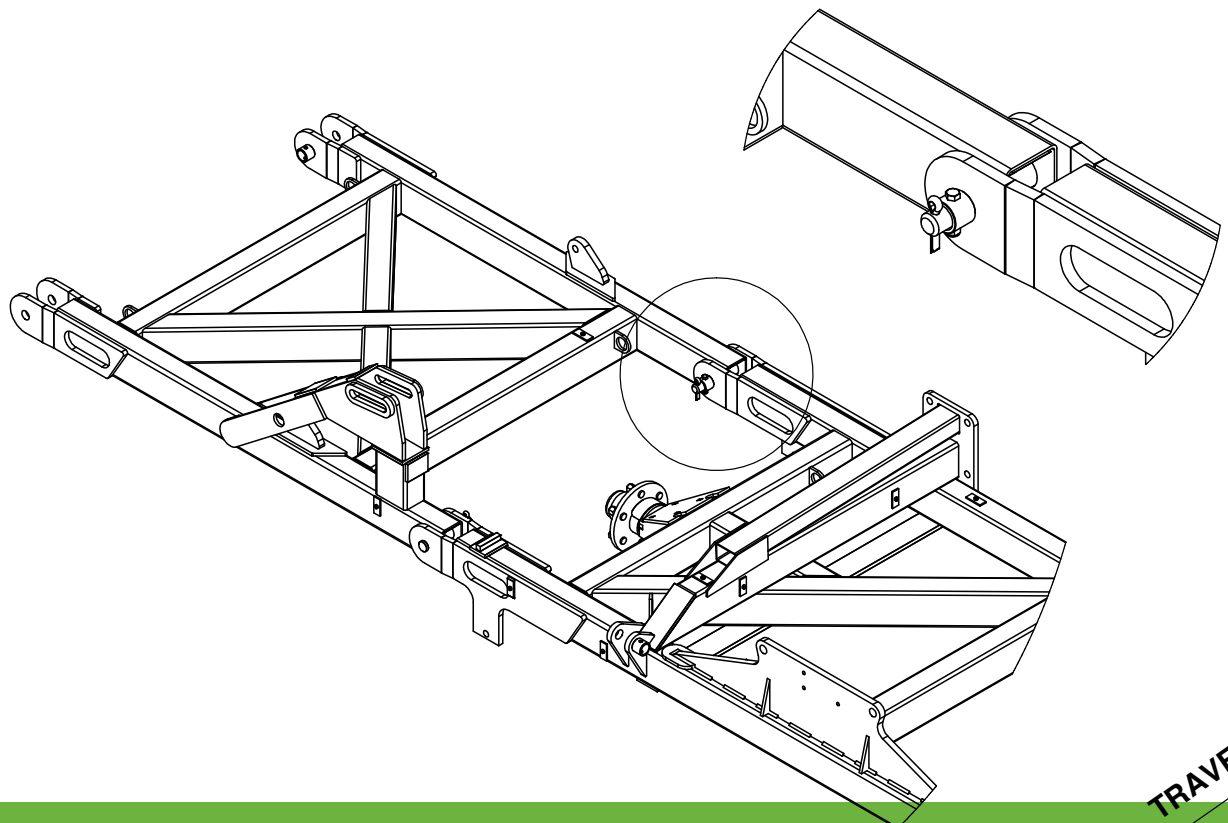

PART NUMBER	DESCRIPTION	QTY.
0733-SH275966205	2.75"R 6 Tonne on 205mm PCD Hub Complete	1
0181-GN1-845	Grease Nipple 1/8" BSP 45 Deg	2
0113-MB 3550DX	35 ID x 50mm DX Bush	4
0801-10-08-235	PCH Wing Pivot Pin	2
0845R-06	45 Rice RH Outer Wing Frame	1
0211-1265	M12 x 65 8.8 zp Bolt	2
0221-NYL12	M12 Nyloc Nut	2
0261-PINC1363	Cotter Pin M13 X 63mm	2
0211-20150	M20 x 150 8.8 zp Bolt	1
0221-NYL20	M20 Nyloc Nut	1

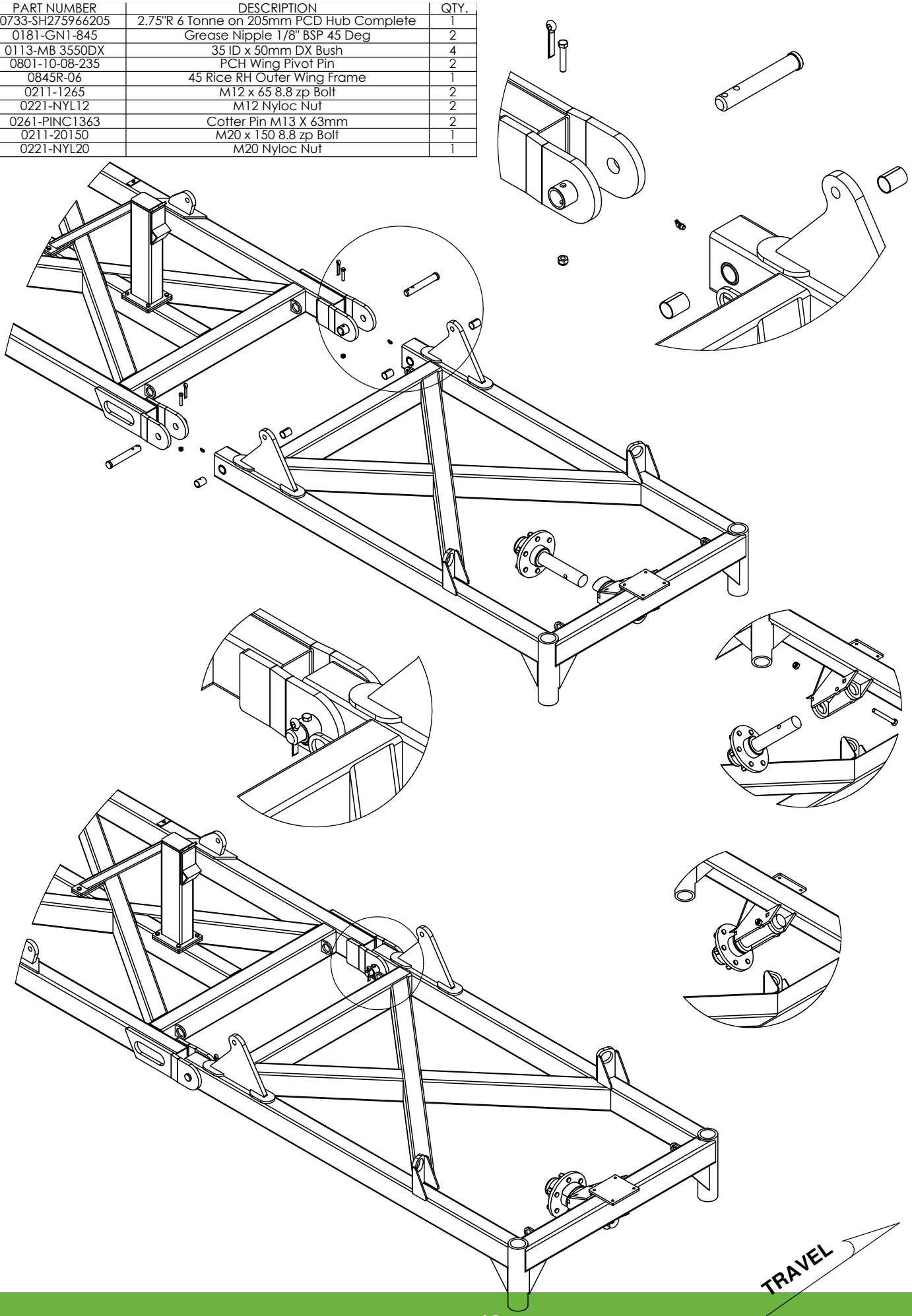

PART NUMBER	DESCRIPTION	QTY.
0845R-06P	45R Outer Wing Post	1
0211-1240	M12 x 40 8.8 zp Bolt	4
0221-NYL12	M12 Nyloc Nut	4

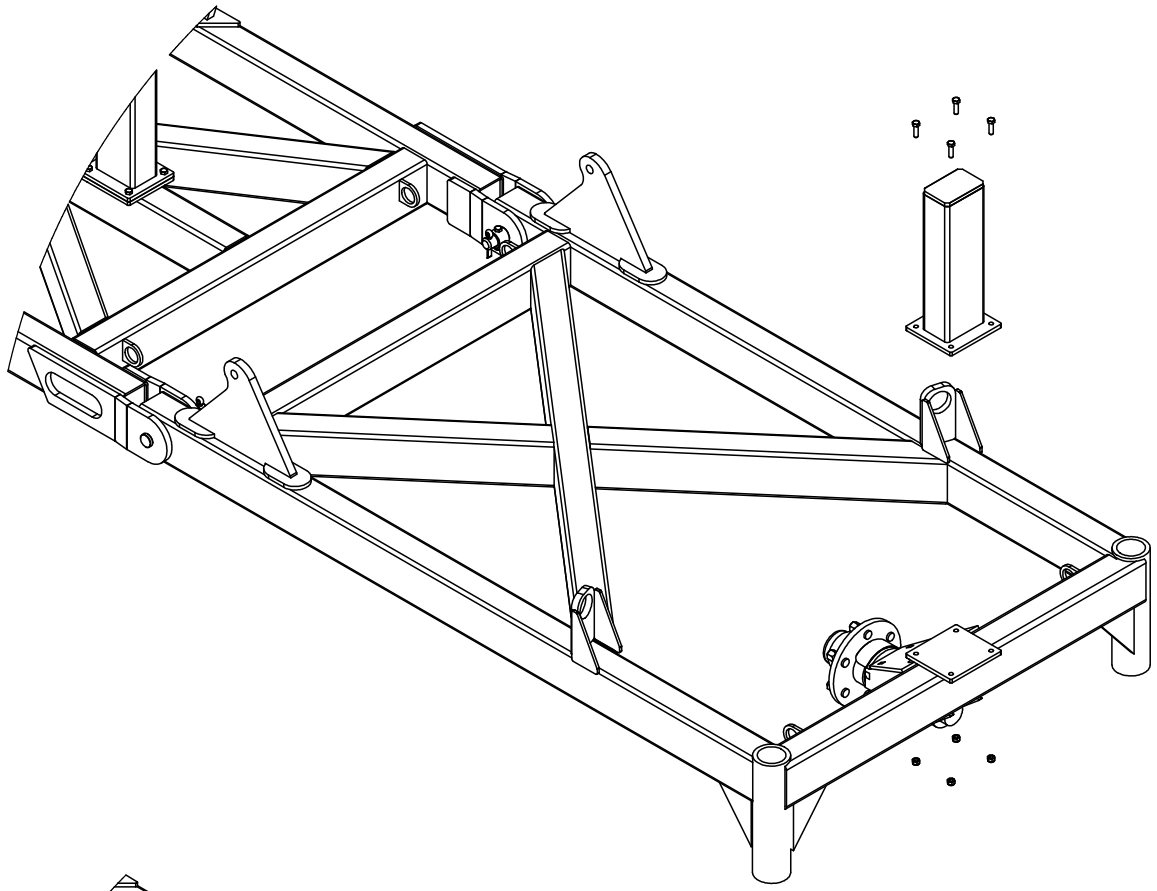

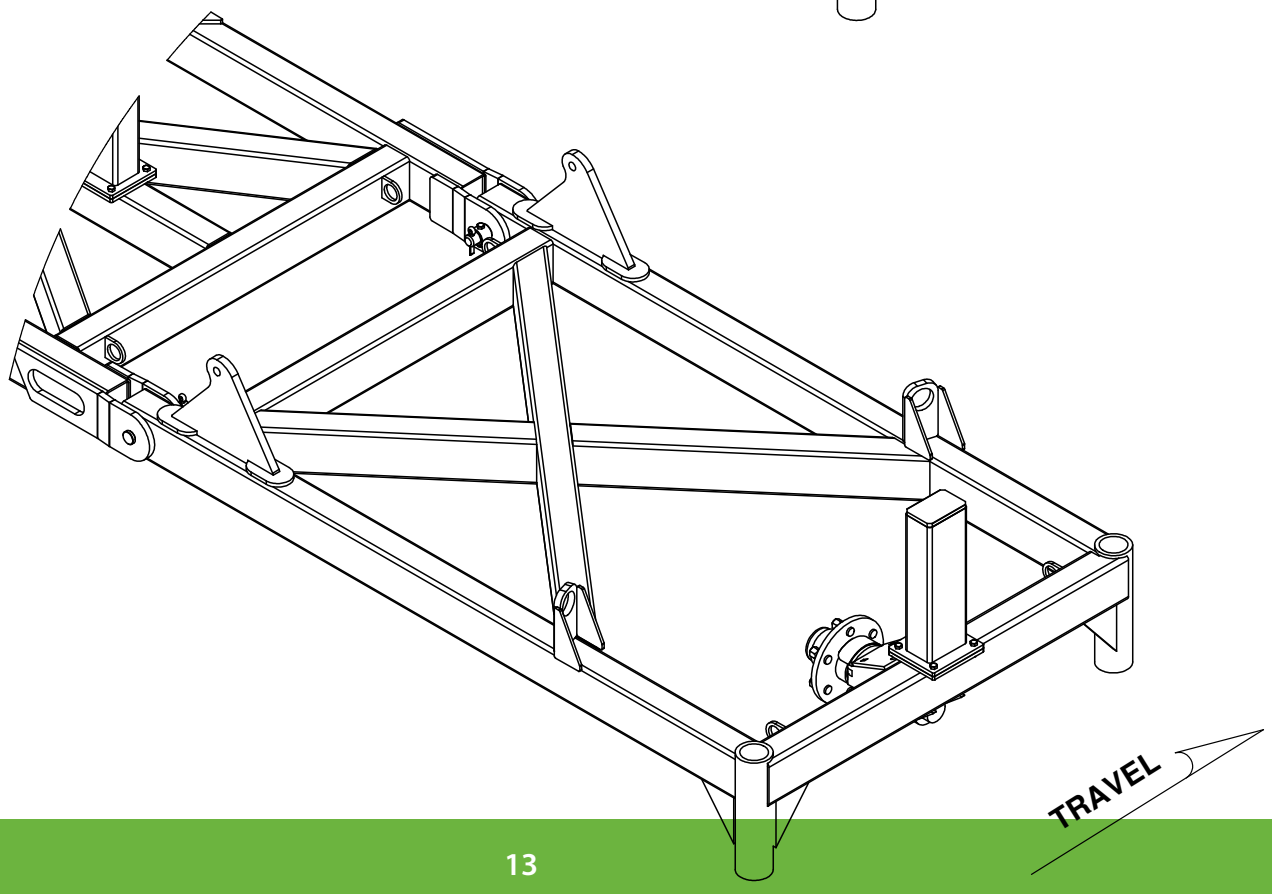

PART NUMBER	DESCRIPTION	QTY.
0733-SH275966205	2.75"R 6 Tonne on 205mm PCD Hub Complete	1
0181-GN1-845	Grease Nipple 1/8" BSP 45 Deg	2
0113-MB 3550DX	35 ID x 50mm DX Bush	4
0801-10-08-235	PCH Wing Pivot Pin	2
0211-1265	M12 x 65 8.8 zp Bolt	2
0221-NYL12	M12 Nyloc Nut	2
0261-PINC1363	Cotter Pin M13 X 63mm	2
0211-20150	M20 x 150 8.8 zp Bolt	1
0221-NYL20	M20 Nyloc Nut	1
0845-07	45'/45R LH Outer Wing Frame	1

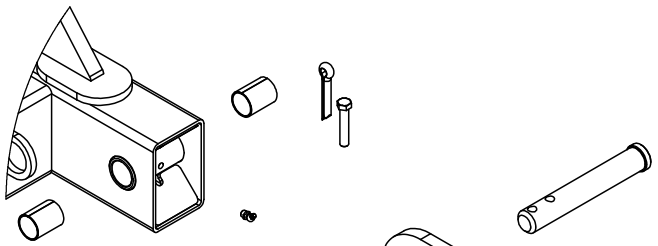

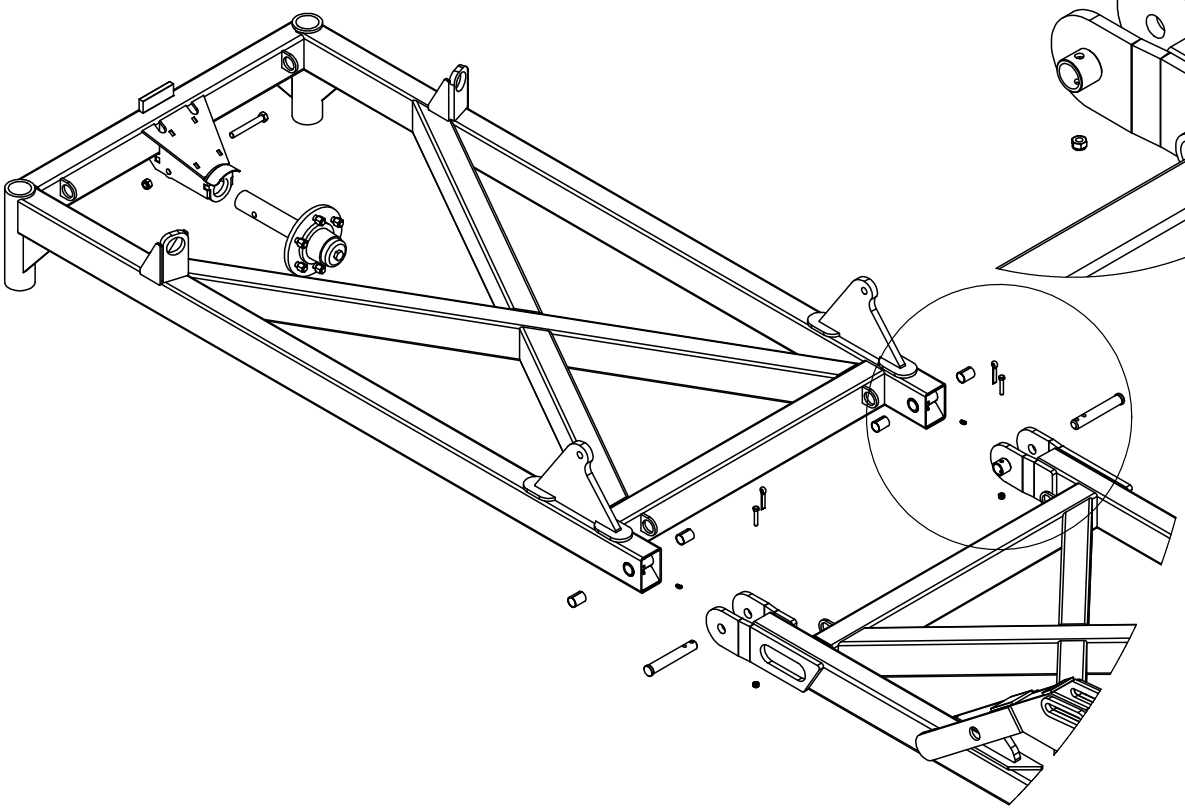

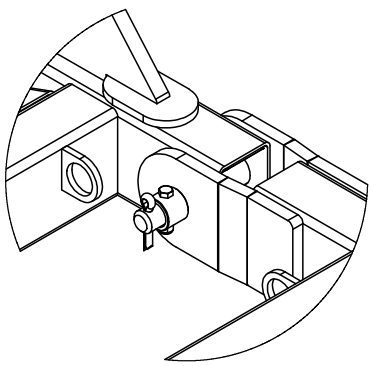

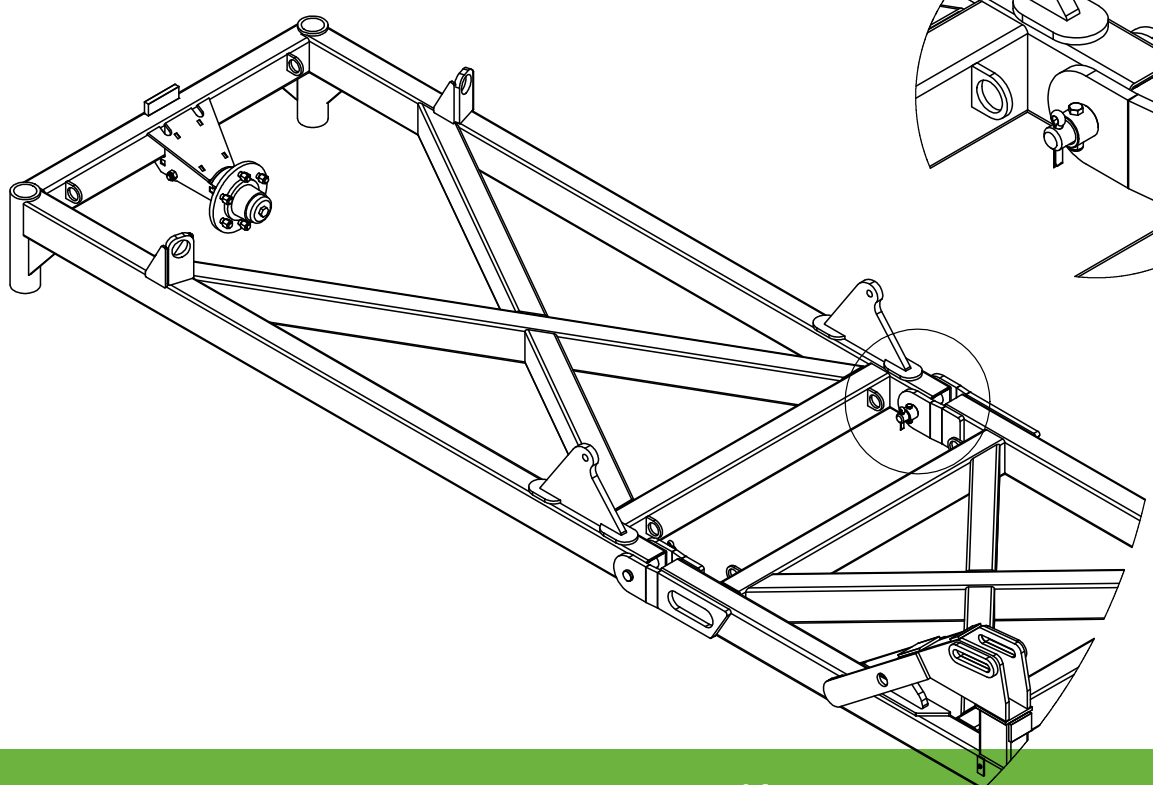

TRAVEL

PART NUMBER	DESCRIPTION	QTY.
0311-5040	5" x 30" Hydraulic Cylinder	1
0801-44102956-2	Cylinder Pin 1 1/4" x 116mm	1
0801-44102956-1	Cylinder Pin 1 1/4" x 220mm 4140	1
0232-11-4 FW	Washer Flat 1 1/4"	2
0801-KE012	S Locking Pin Clip 5mm	3

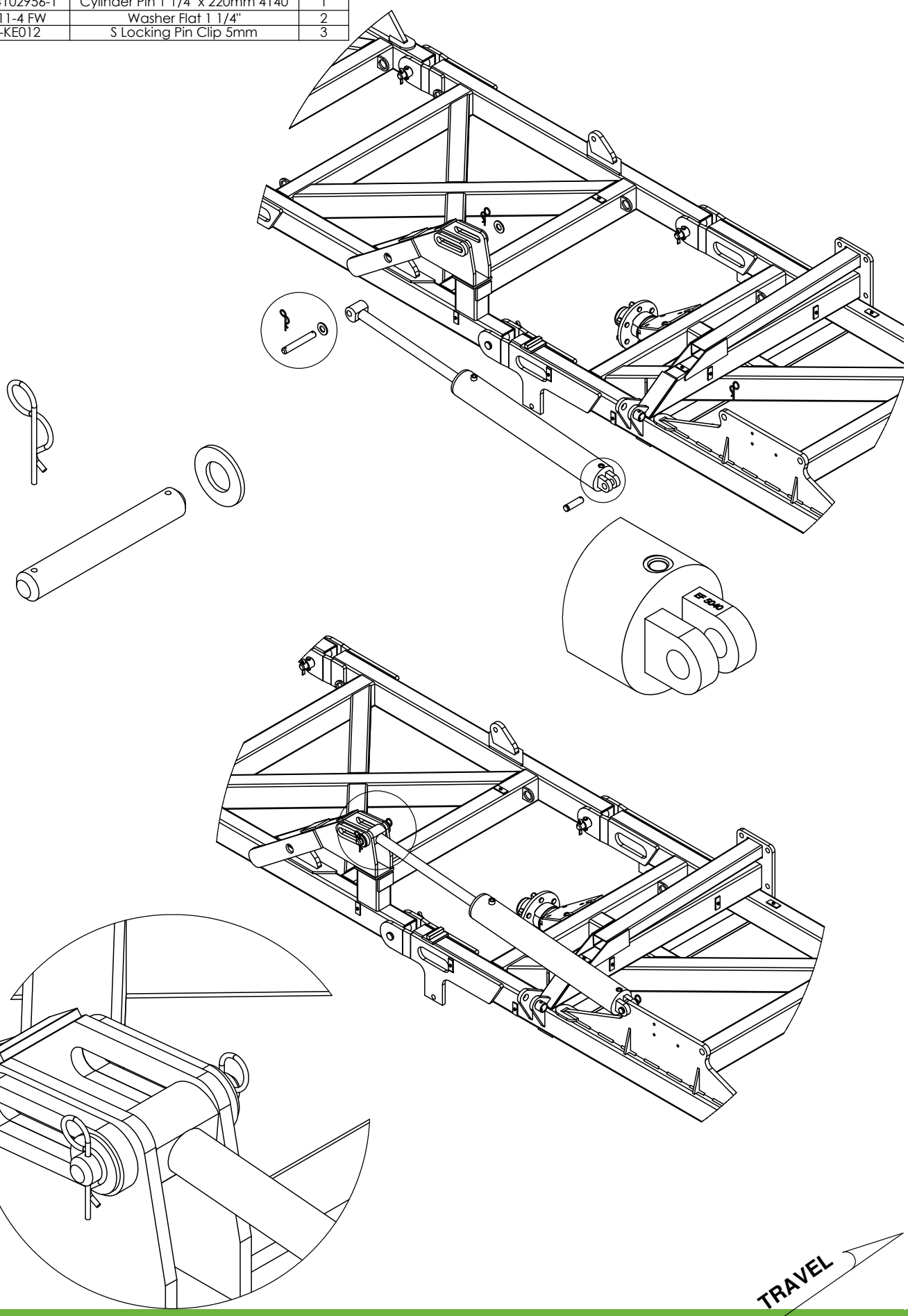

PART NUMBER	DESCRIPTION	QTY.
0311-5040	5" x 30" Hydraulic Cylinder	1
0801-44102956-2	Cylinder Pin 1 1/4" x 116mm	1
0801-44102956-1	Cylinder Pin 1 1/4" x 220mm 4140	1
0232-11-4 FW	Washer Flat 1 1/4"	2
0801-KE012	S Locking Pin Clip 5mm	3

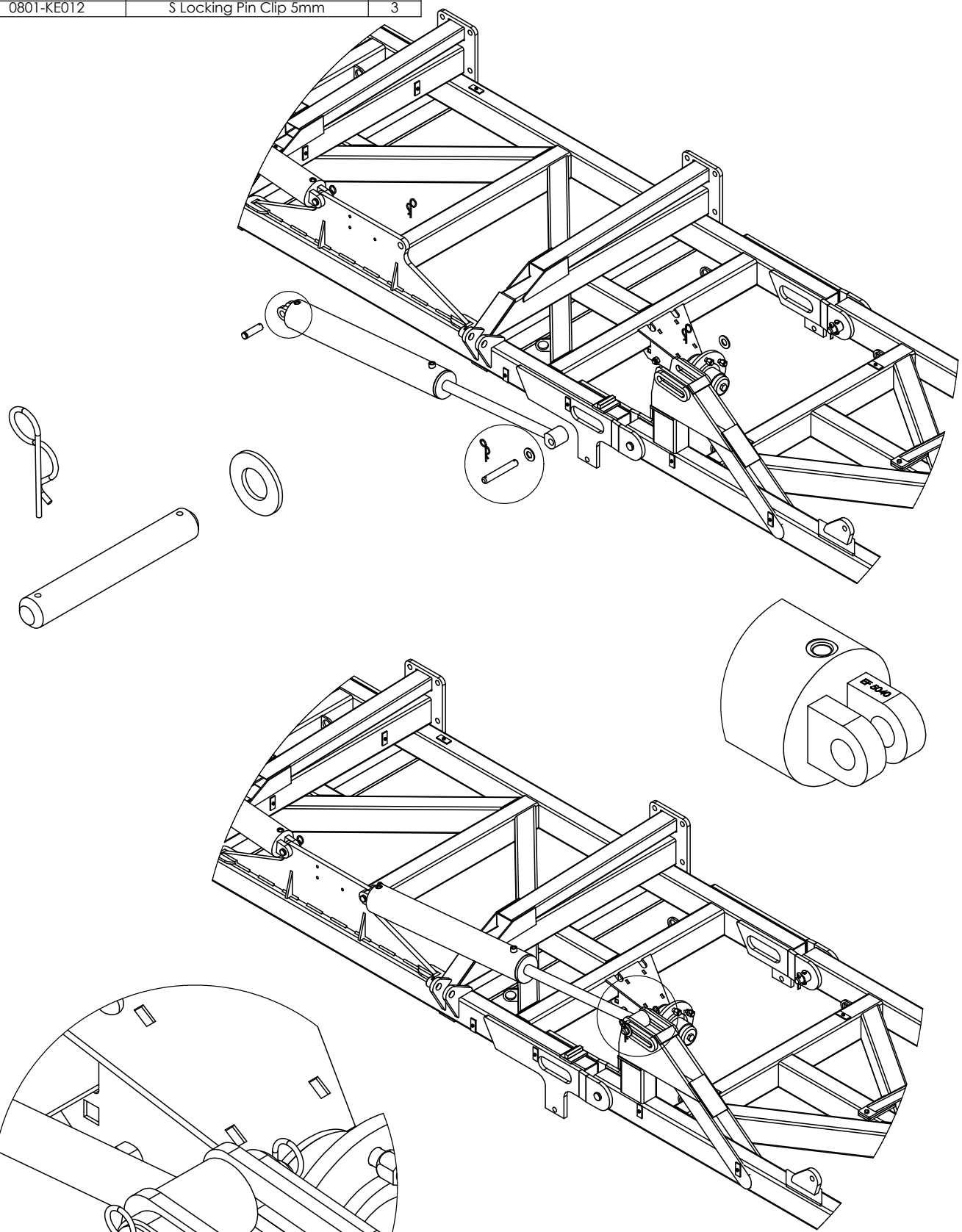

PART NUMBER	DESCRIPTION	QTY.
0311-2957	3" x 24" Hydraulic Cylinder	2
0801-44082938	Clevis Pin 1" x 75mm	4
0511-RCLIP4	R Clip 4mm	4

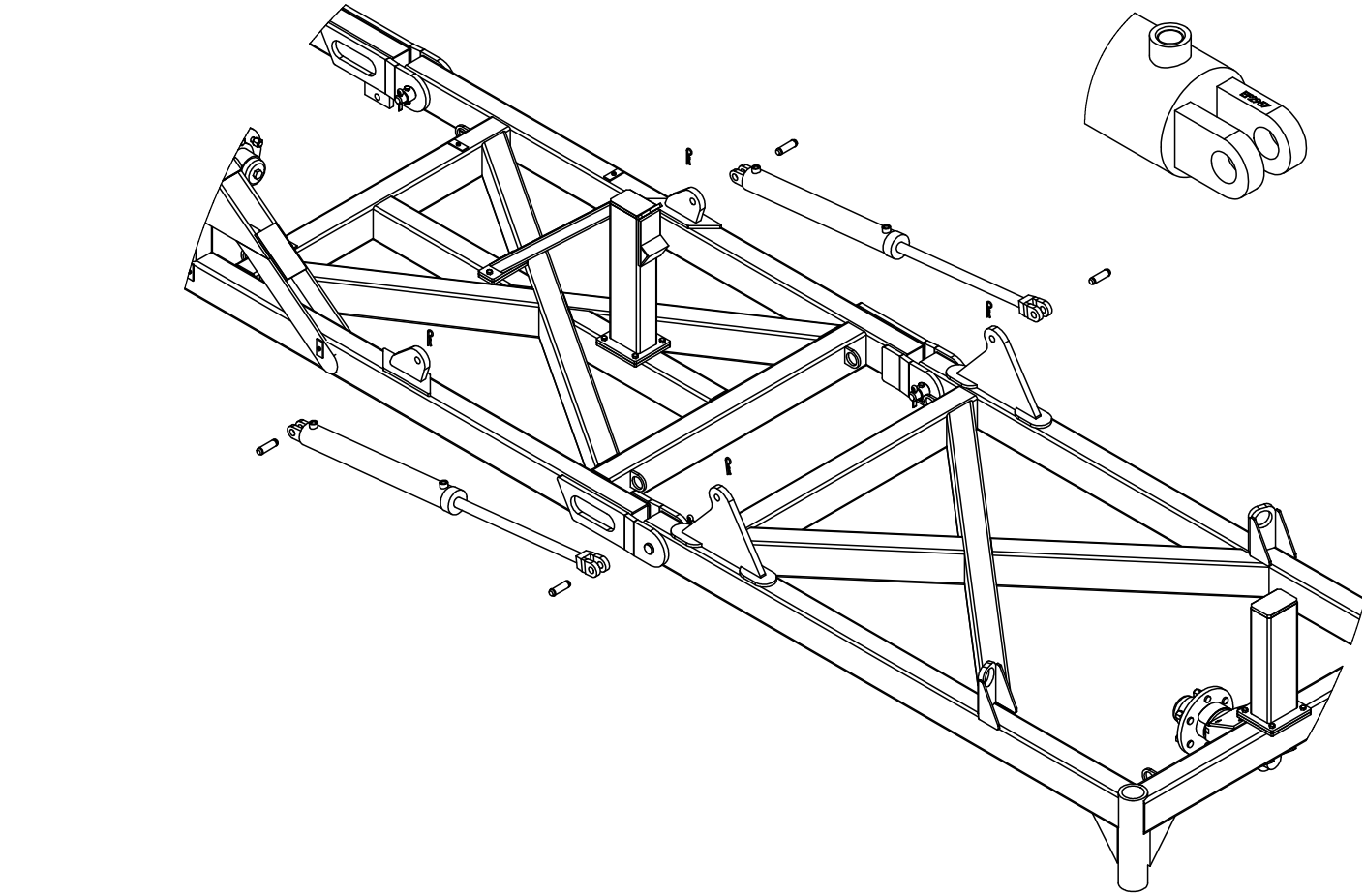

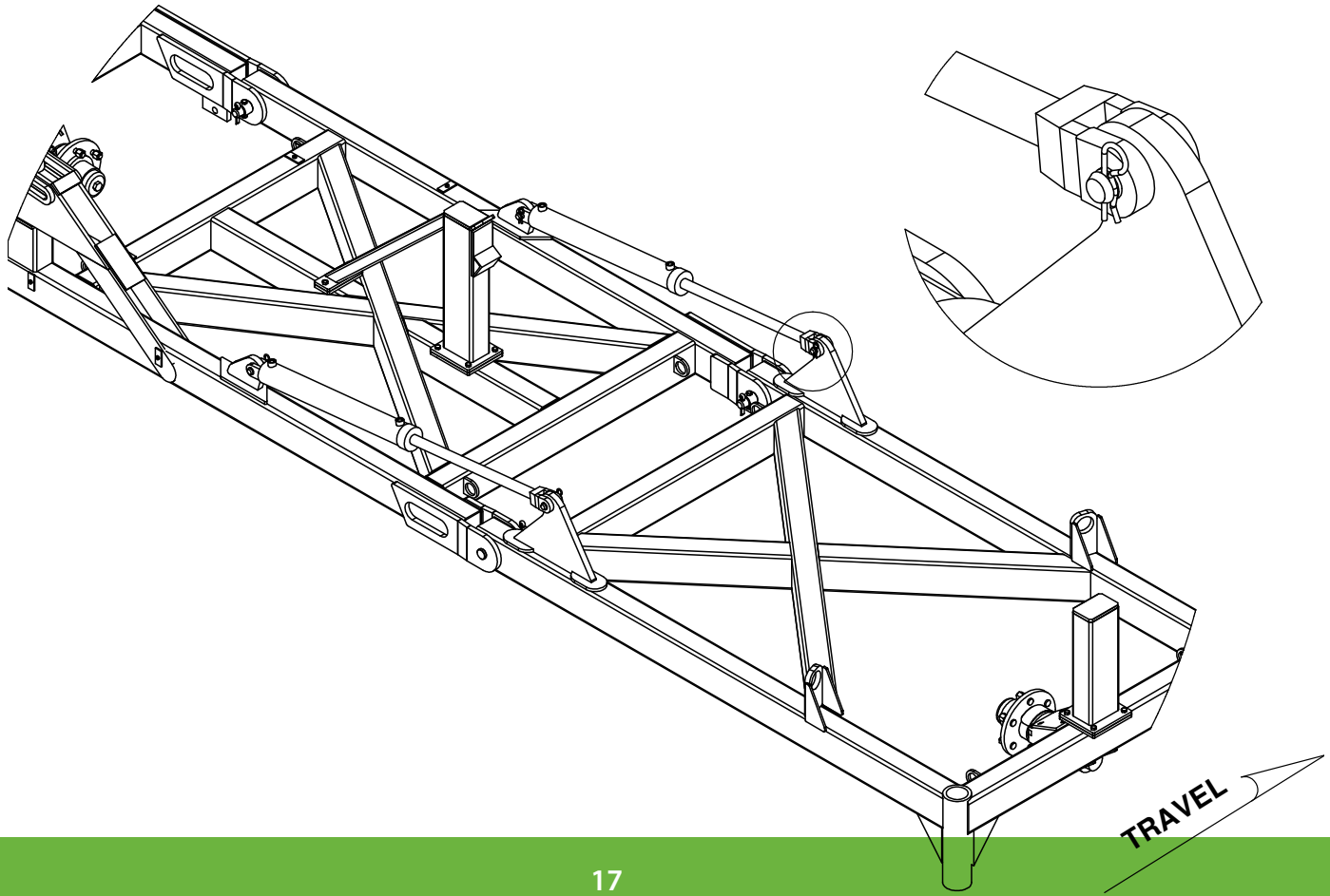

PART NUMBER	DESCRIPTION	QTY.
0311-2957	3" x 24" Hydraulic Cylinder	2
0801-44082938	Clevis Pin 1" x 75mm	4
0511-RCLIP4	R Clip 4mm	4

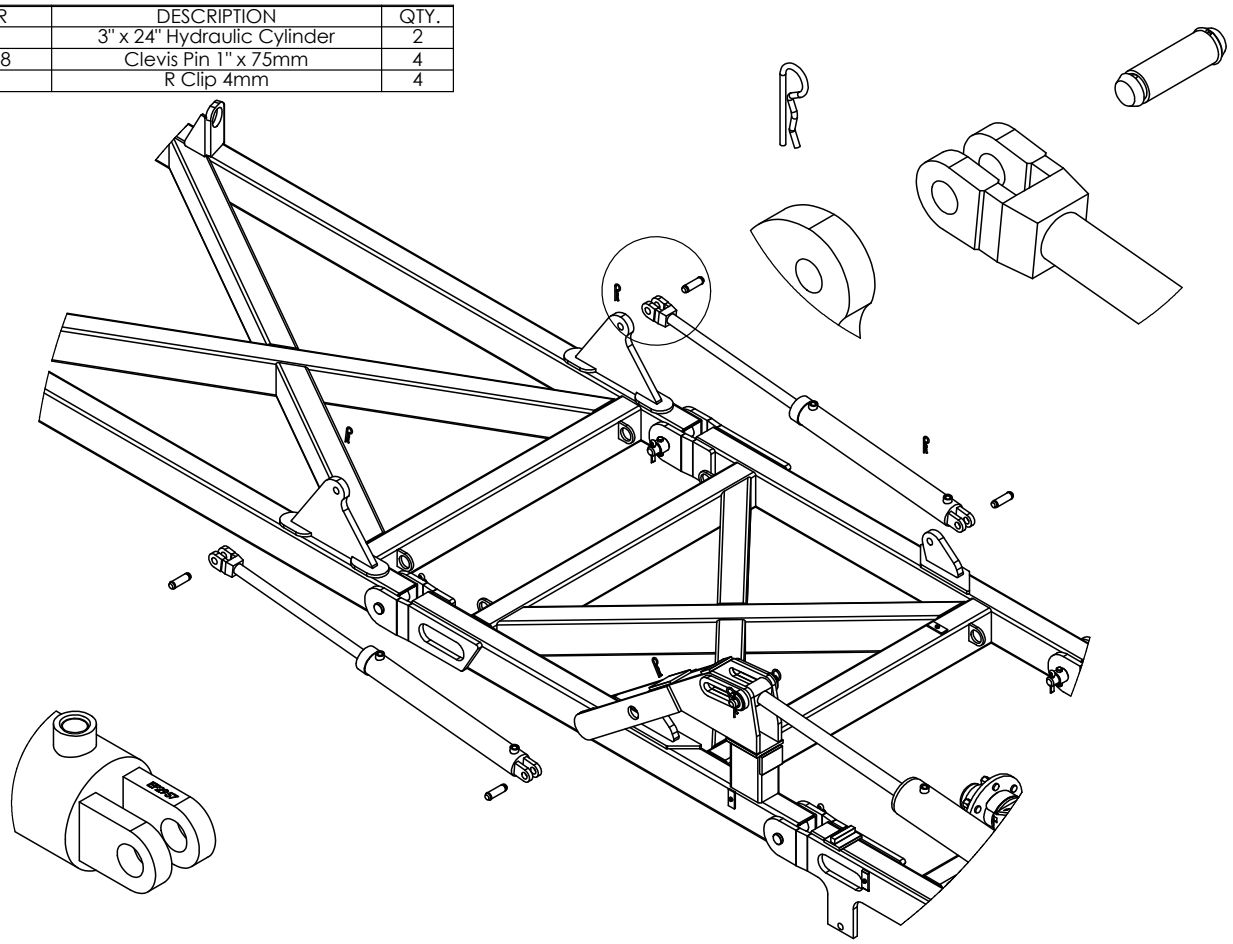

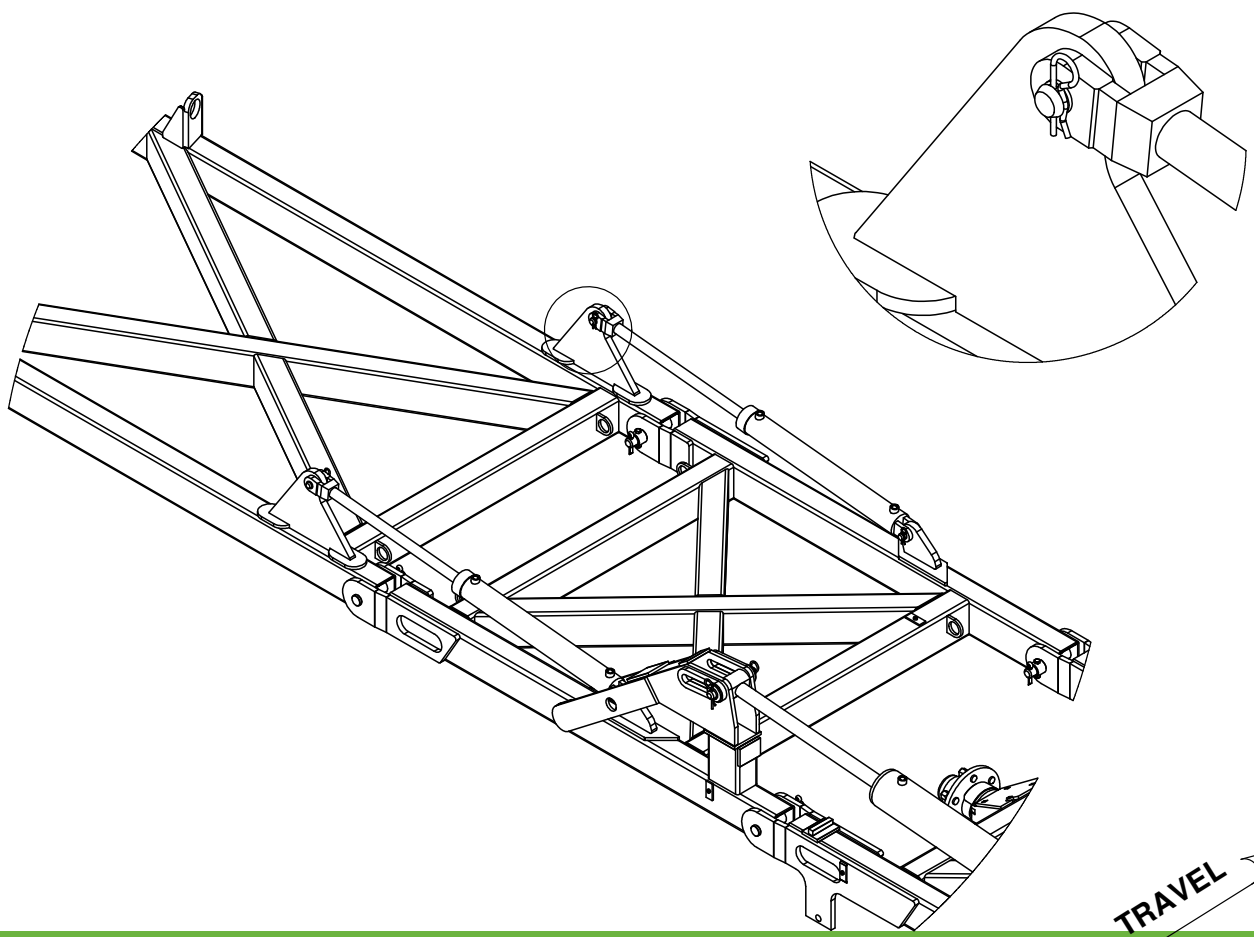

PART NUMBER	DESCRIPTION	QTY.
0810-28-40&45	40 & 45' Front Module	1

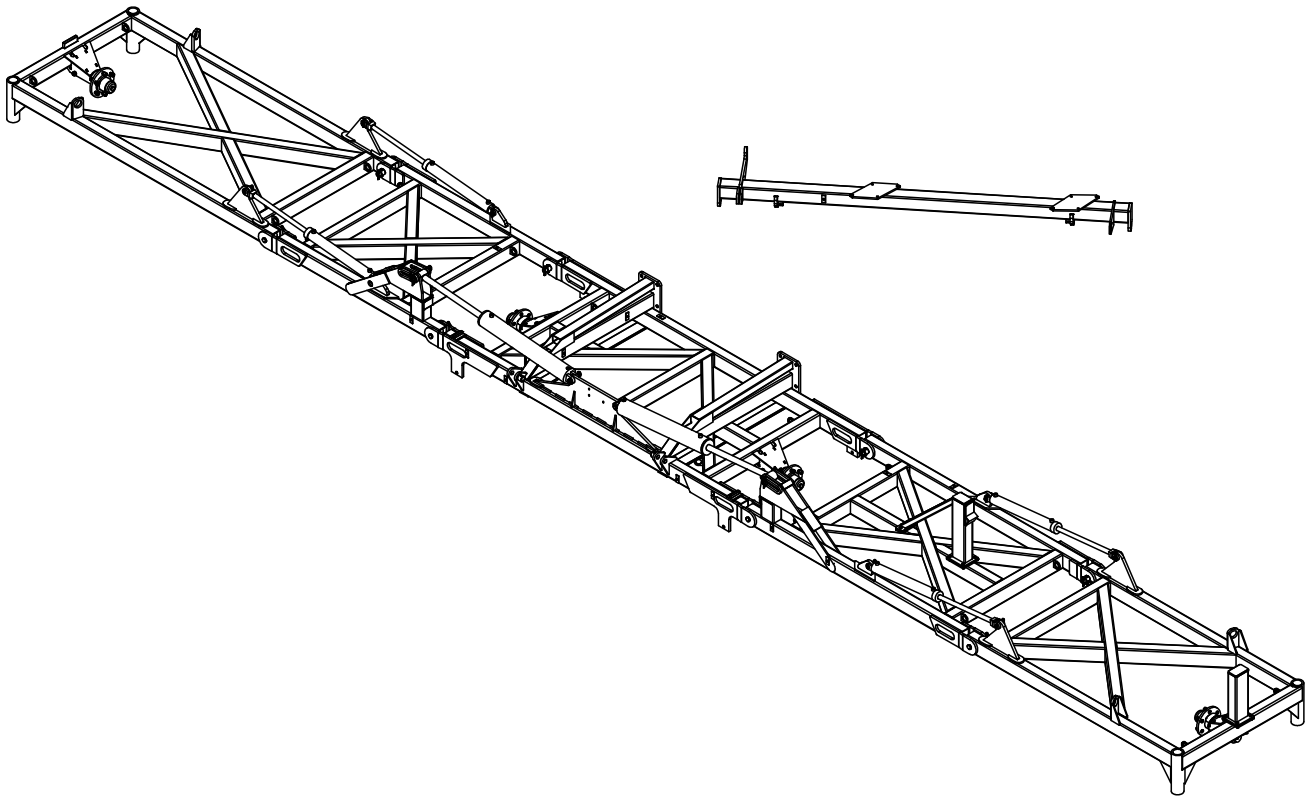

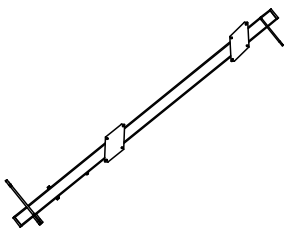

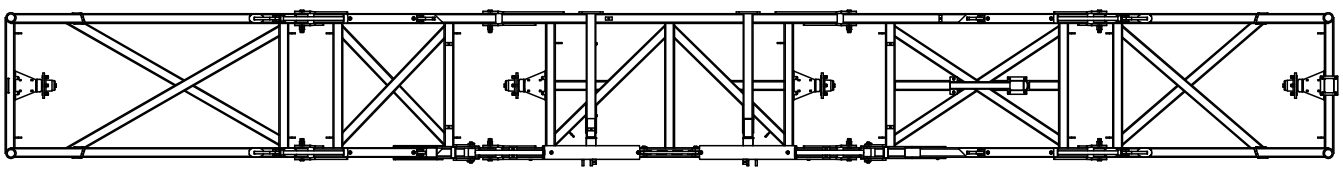

TRAVEL

PART NUMBER	DESCRIPTION	QTY.
0211-2475	M24 x 75 8.8 zp Bolt	12
0221-NYL24	M24 Nyloc Nut	12
0211-1650	M16 x 50 8.8 zp Bolt	8
0221-NYL16	M16 Nyloc Nut	8
0845-02	45'/45R Front A-Frame	1

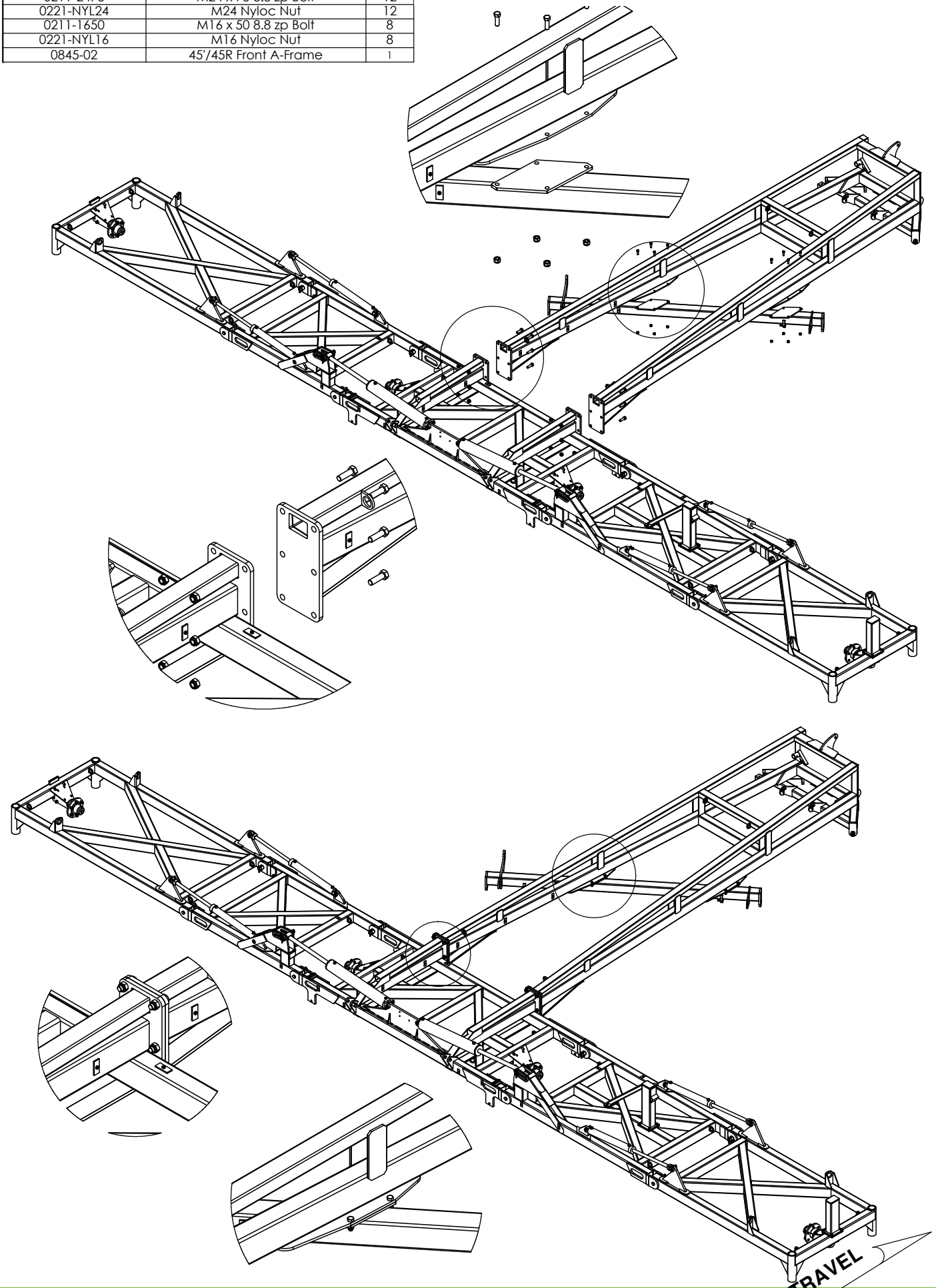

PART NUMBER	DESCRIPTION	QTY.
0751-15.0-70-18TR	15.0/70/18 Tyre and Rim Complete	4

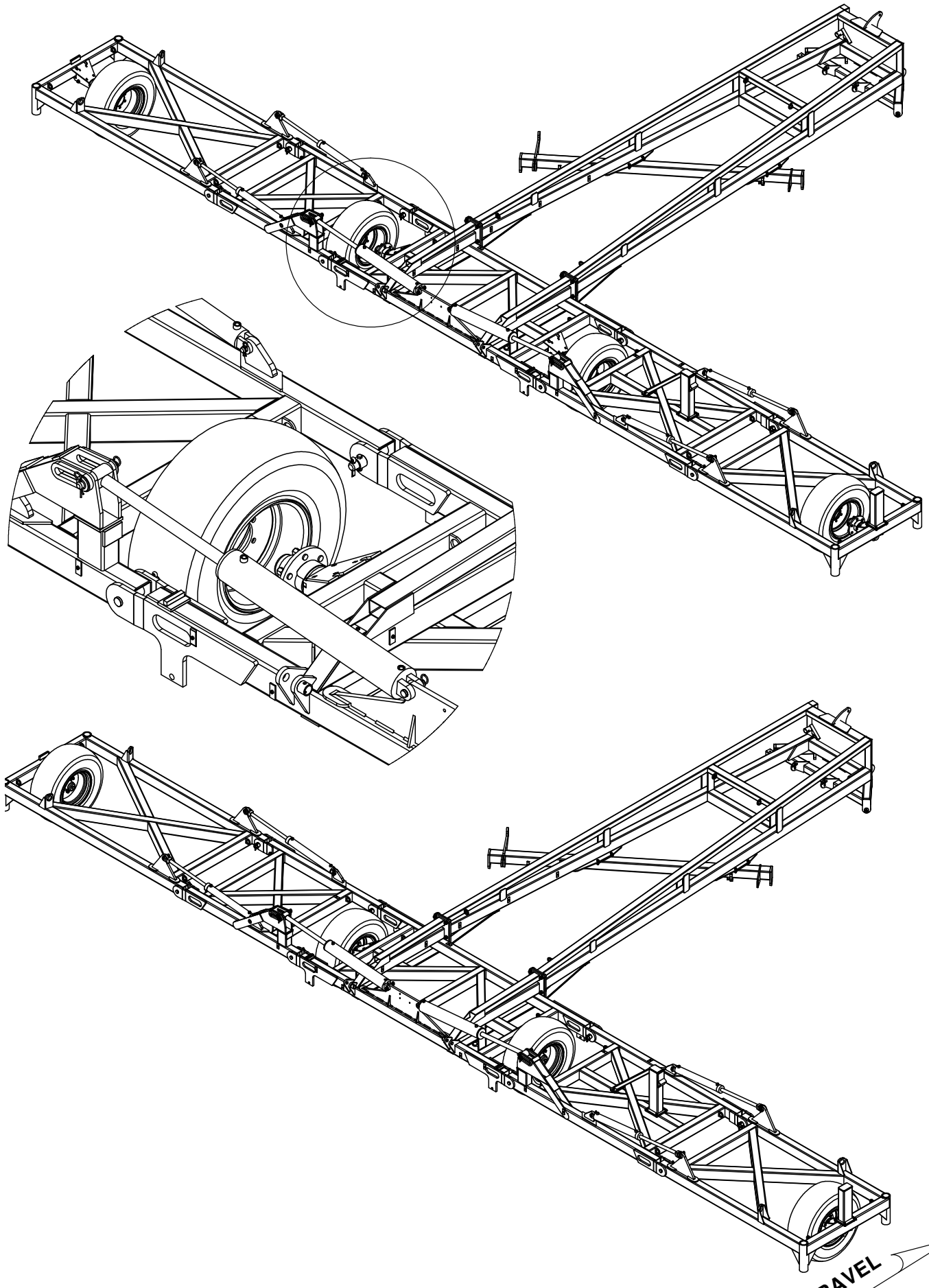

PART NUMBER	DESCRIPTION	QTY.
0801-44082938	Clevis Pin 1" x 75mm	2
0511-RCLIP4	R Clip 4mm	2
0810-31	Jack Assy	1
0810-08	Draw Bar Frame	1
0801-10-13-970	Drawbar Pivot Pin	1
0311-6002	3" x 12" EXT Hydraulic Cylinder	1
0211-1265	M12 x 65 8.8 zp Bolt	1
0221-NYL12	M12 Nyloc Nut	1
0261-PINC1363	Cotter Pin M13 X 63mm	1
0801-B3077	Jack Pin	1
0810-151	Hose Post Assy	1
0211-625	Bolt M6 x 25	3
0221-NYL6	M6 Nyloc Nut	3

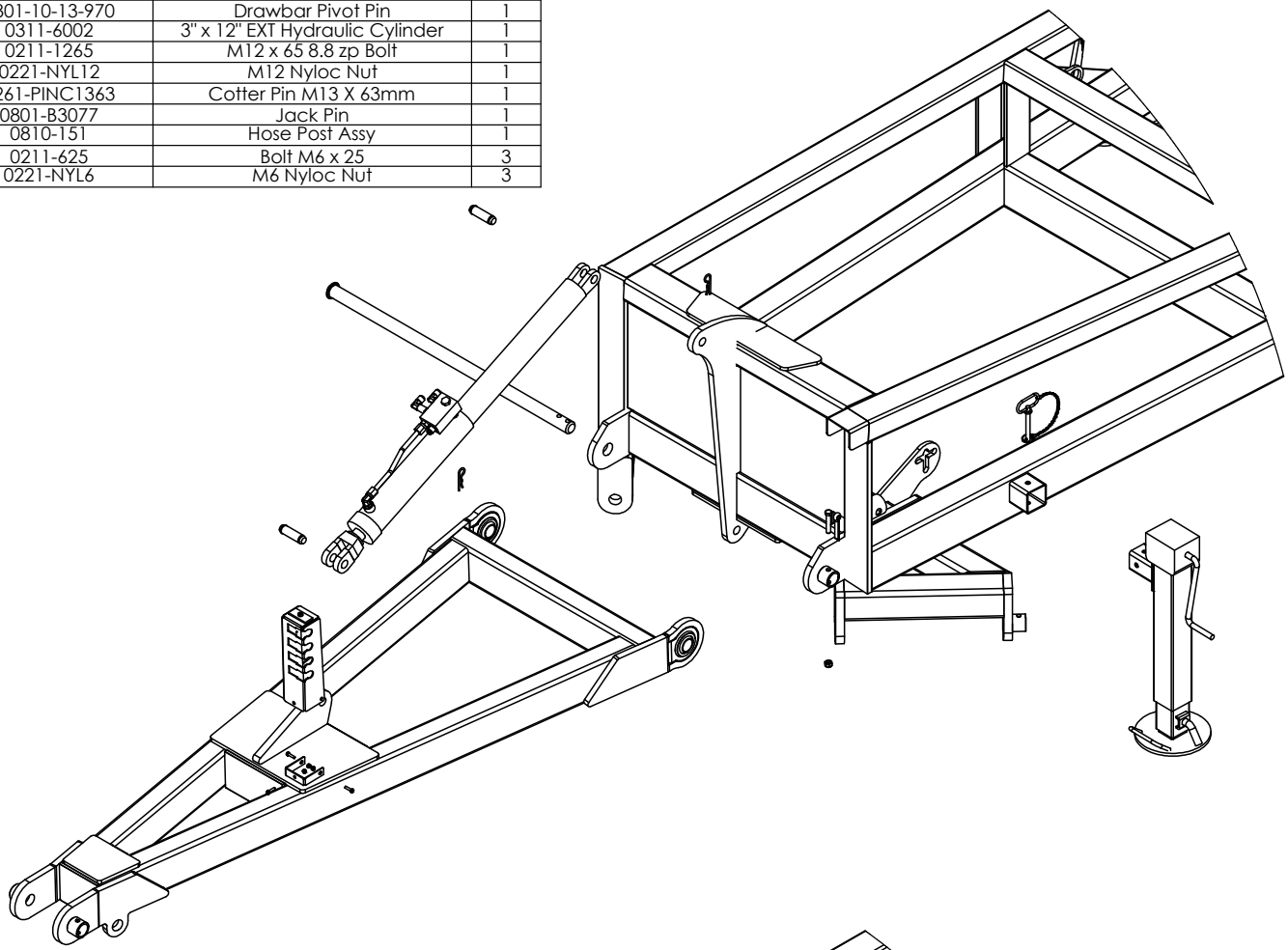

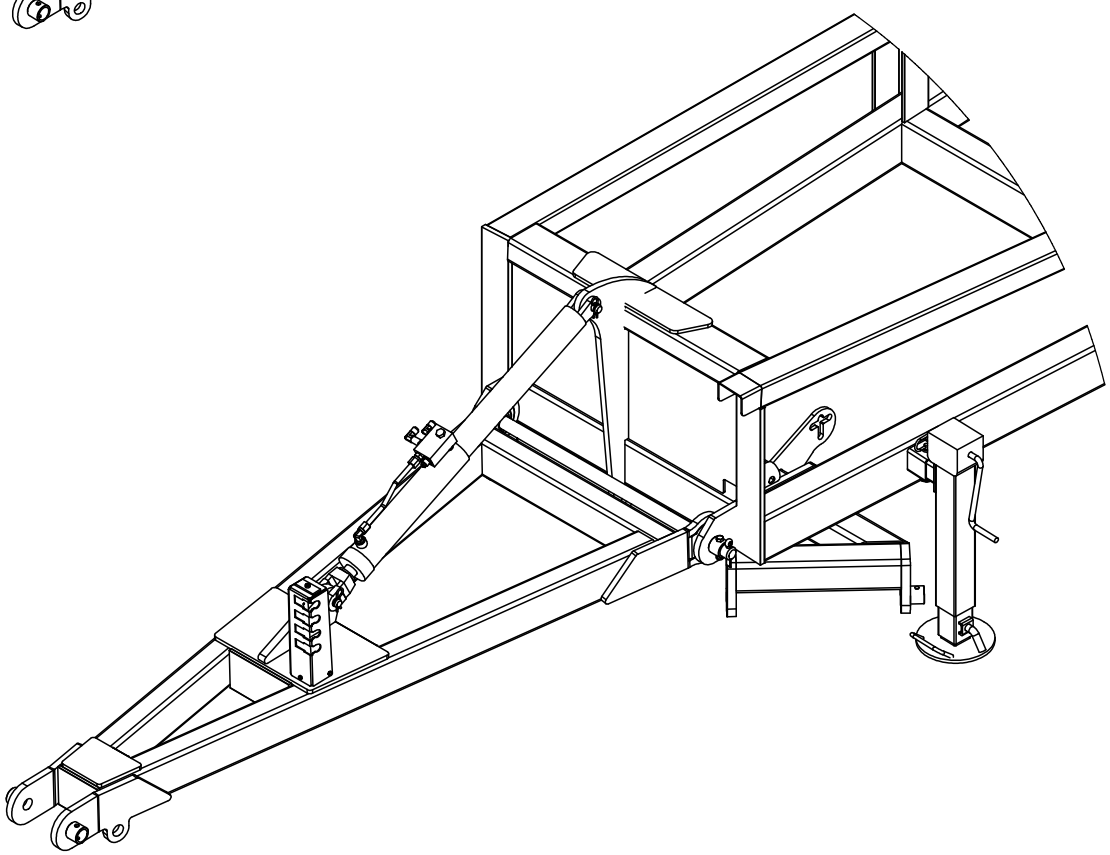

TRAVEL

PART NUMBER	DESCRIPTION	QTY.
0810-09	Tow Hitch	1
0810-22	Parrallel Arm	1
0801-KE-0905-1-C	Hardened Tow Hitch Bush 2 1/4"	1
0801-10-06	Tow Hitch Pin	1
0172-D1400-0820	Circlip External 82mm	1
0801-KE-0307-1	Clevis Pin 25mm x 75mm	2
0211-1265	M12 x 65 8.8 zp Bolt	2
0221-NYL12	M12 Nyloc Nut	2
0231-F12	M12 zp Flat Washer	2
0261-PINC550	Cotter Pin M5 x 50	2
0810-16	Safety Chain Assembly	1

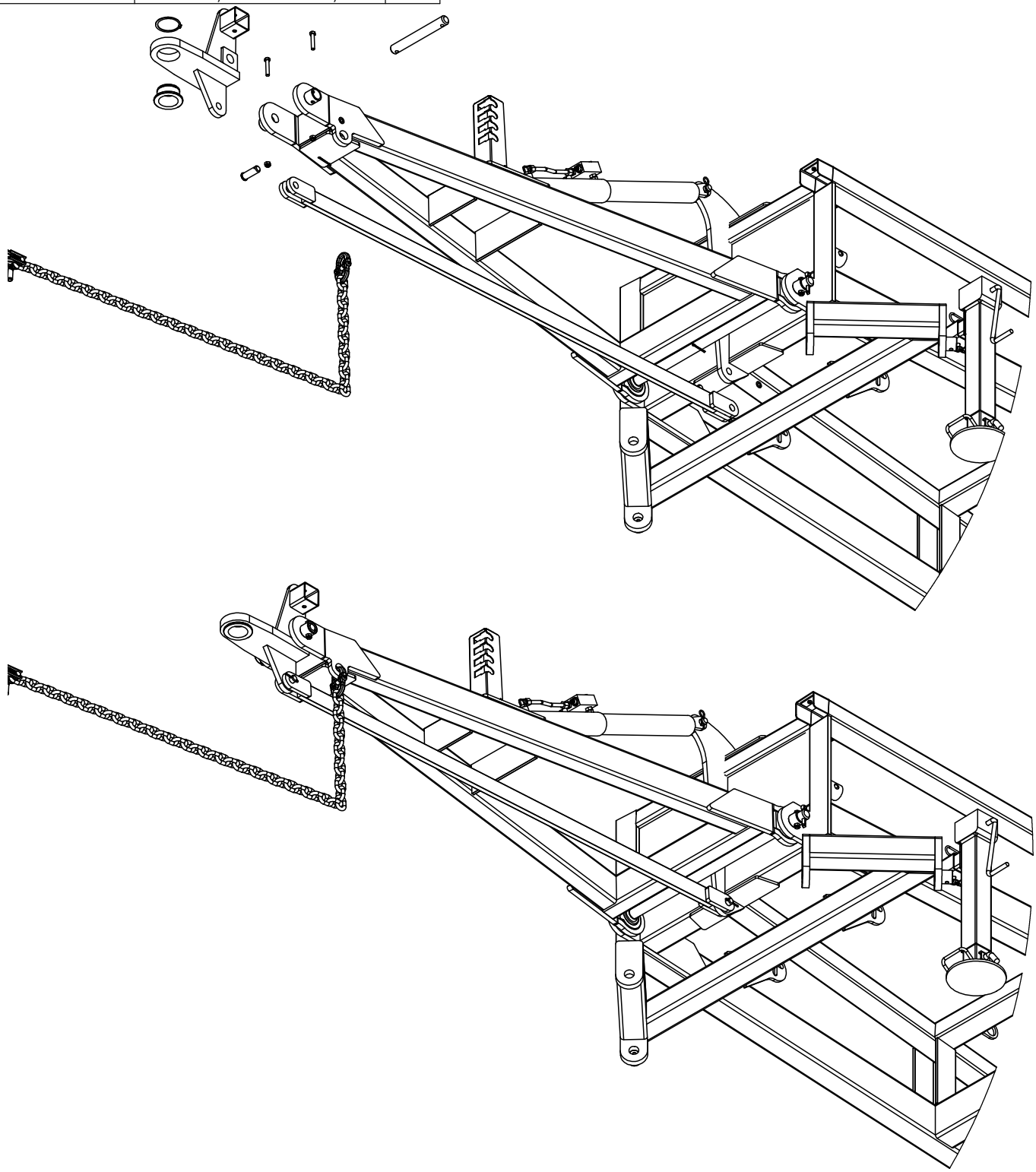

TRAVEL

PART NUMBER	DESCRIPTION	QTY.
0810-29-40&45	40 & 45' Rear Module	1

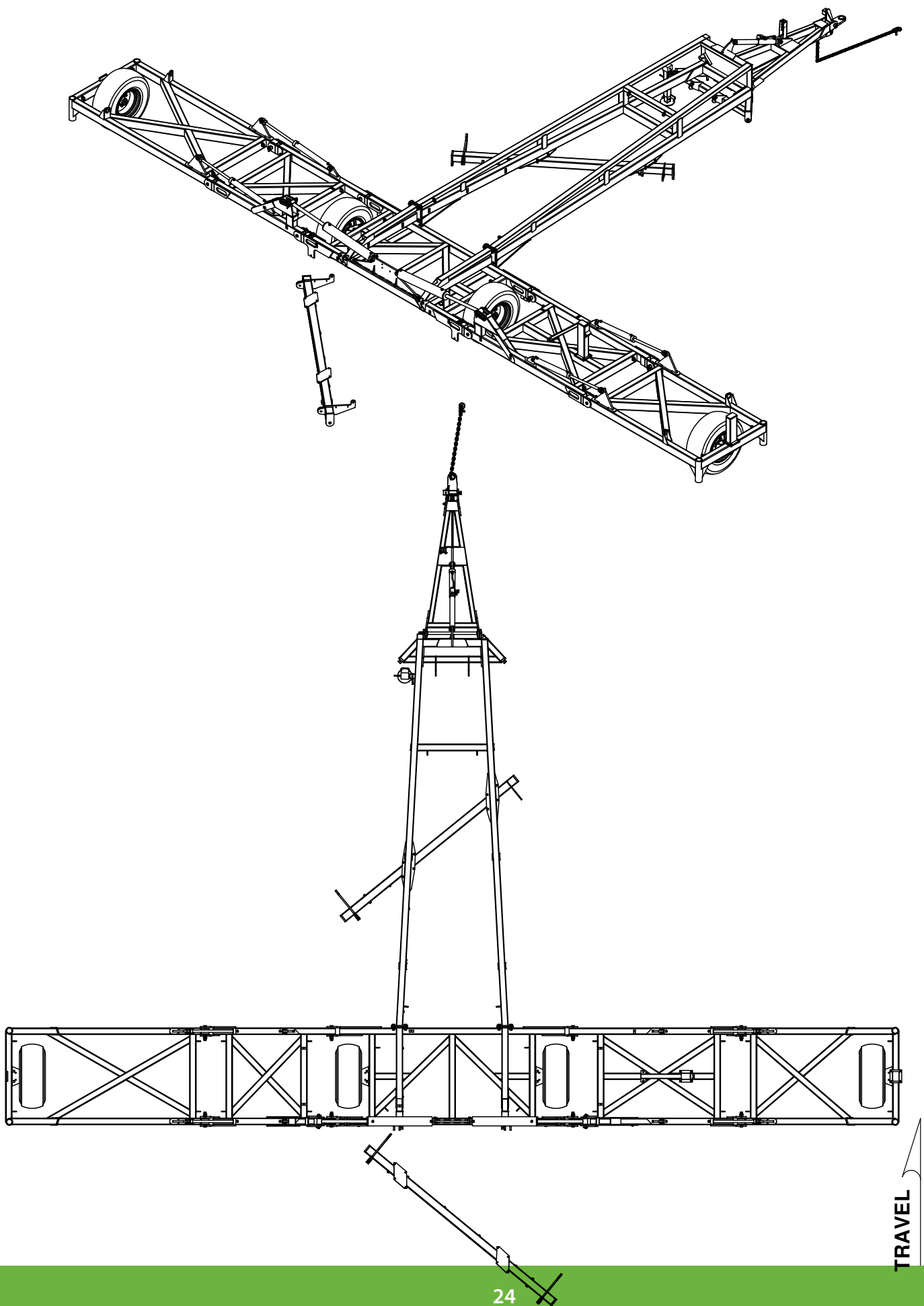

PART NUMBER	DESCRIPTION	QTY.
0801-10-08-175	Tail Frame Pivot pin	2
0211-1265	M12 x 65 8.8 zp Bolt	2
0221-NYL12	M12 Nyloc Nut	2
0261-PINC1363	Cotter Pin M13 X 63mm	2
0211-1650	M16 x 50 8.8 zp Bolt	8
0221-NYL16	M16 Nyloc Nut	8
0845-03	45'/45R Rear A-Frame	1

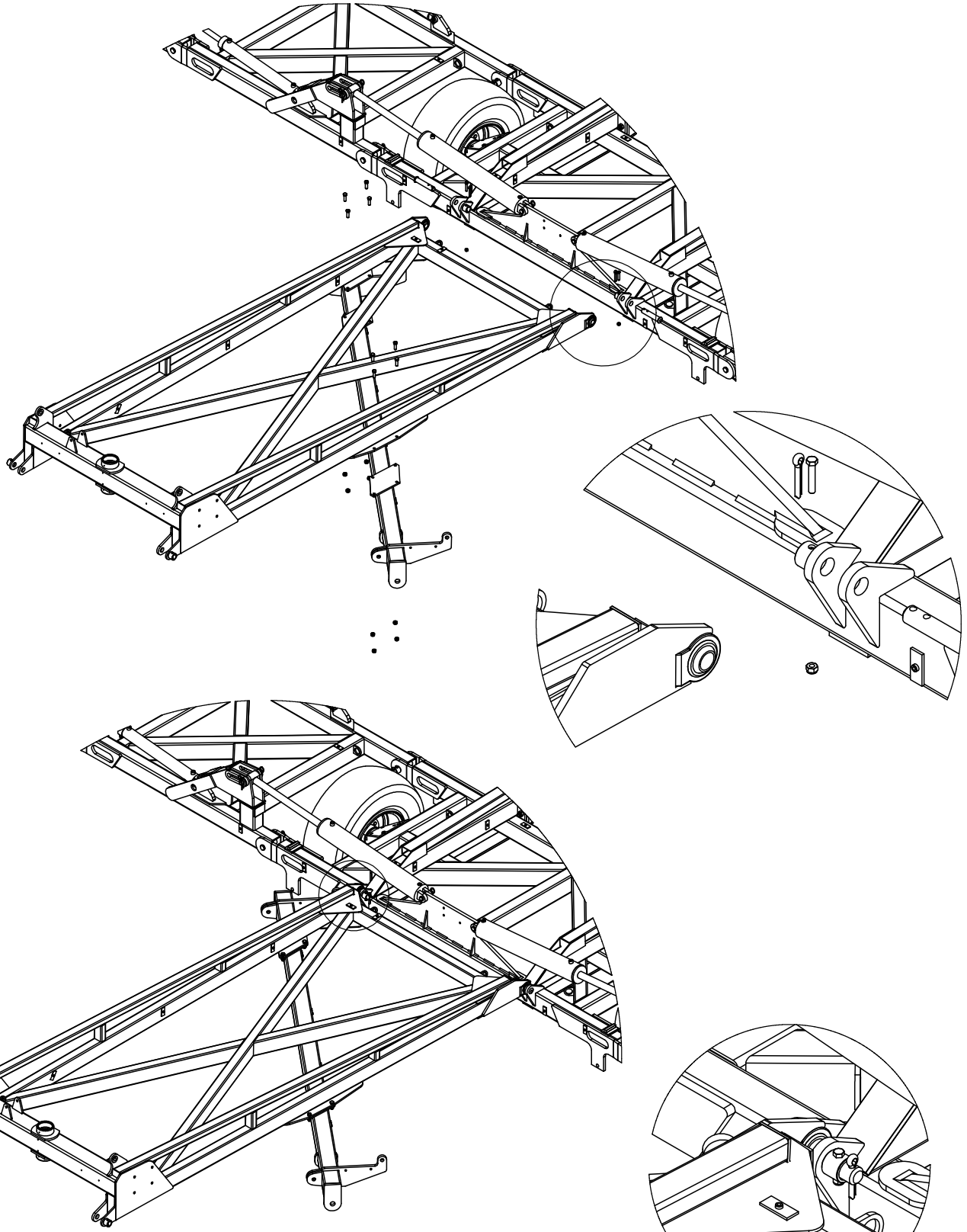

PART NUMBER	DESCRIPTION	QTY.
0113-GE70DO-2RS	Plain Spherical Bearing 70mm	2
0172-J105	Circlip Internal 105mm	2
0810-11-70	70mm Jockey Wheel Assembly	1
0801-KE-0705-13	70mm Dust Cap	1
0810-12DISC	Jockey Wheel Brake Disc	1
0231-SQ12505	Washer Square M12 x 50 x 5	1
0231-S12	M12 zp Spring Washer	1
0211-1230	M12 x 30 8.8 zp Bolt	1
0181-GN1-4	Grease Nipple 1/4" UNF	2

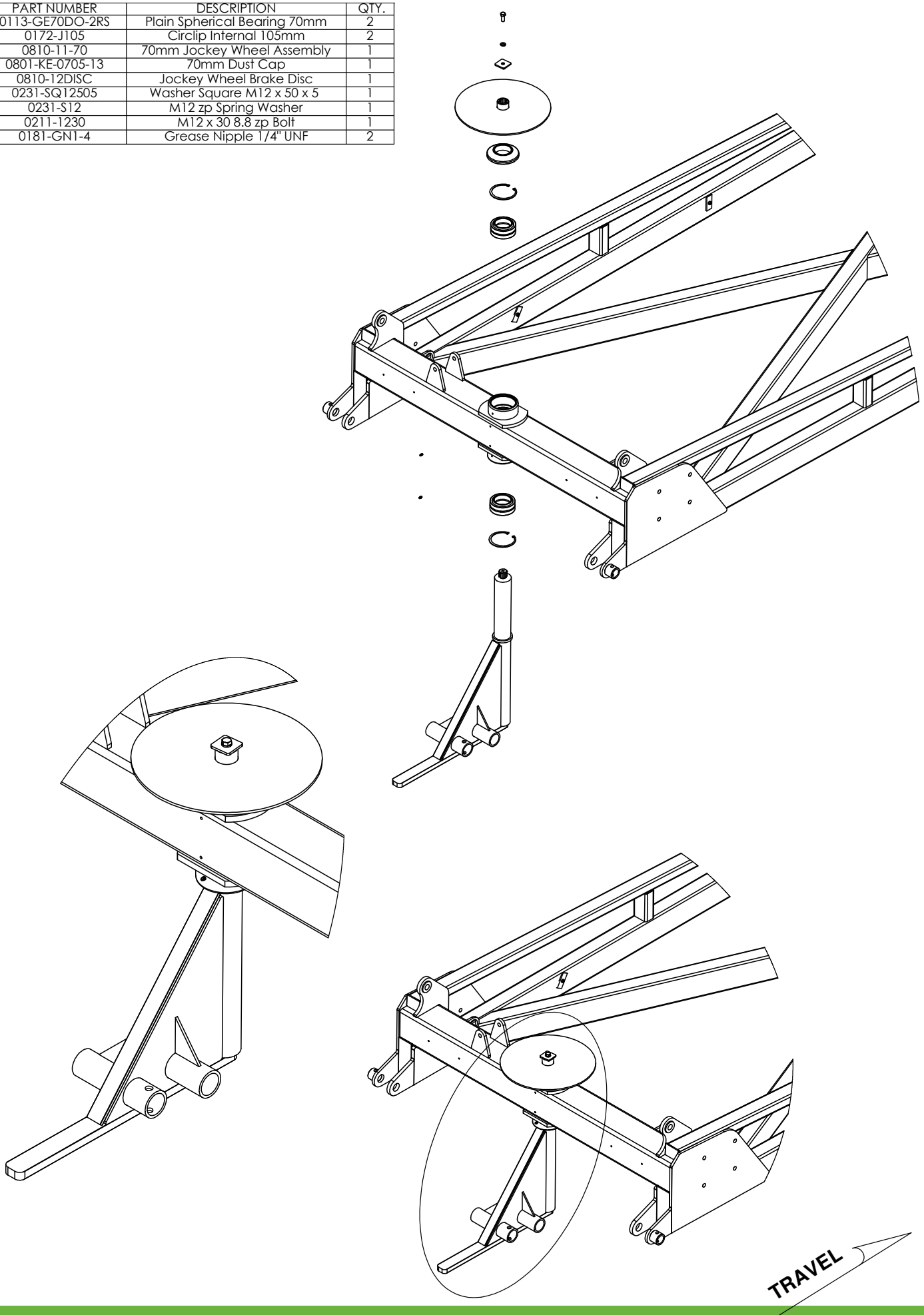

PART NUMBER	DESCRIPTION	QTY.
0181-GN1-4	Grease Nipple 1/4" UNF	2
0810-12CAL	Jockey Wheel Brake Caliper	1
0211-16150	M16 x 150 8.8 zp Bolt	2
0221-NYL16	M16 Nyloc Nut	1
0801-KE009	Brake Compression Spring	1
0231-SQ16505	Washer Square M16 x 50 x 5	1

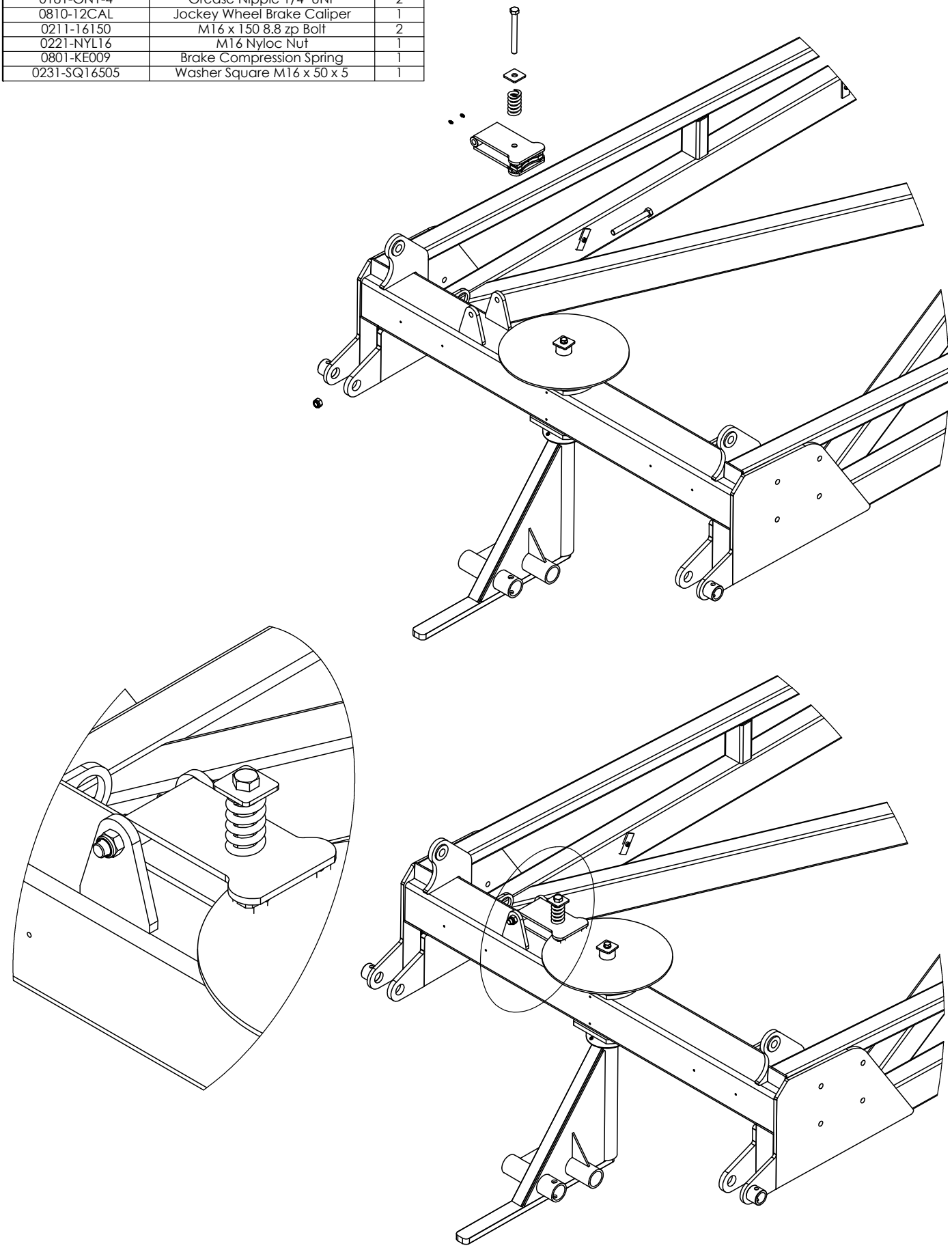

TRAVEL

PART NUMBER	DESCRIPTION	QTY.
0733-K503T66S	Axle 2"R 3T 6 on 6" PCD 330 OHF	2
0211-1690	M16 x 90 8.8 zp Bolt	2
0221-NYL16	M16 Nyloc Nut	2
0751-11L15	11L15F3 Tyre on Rim	2

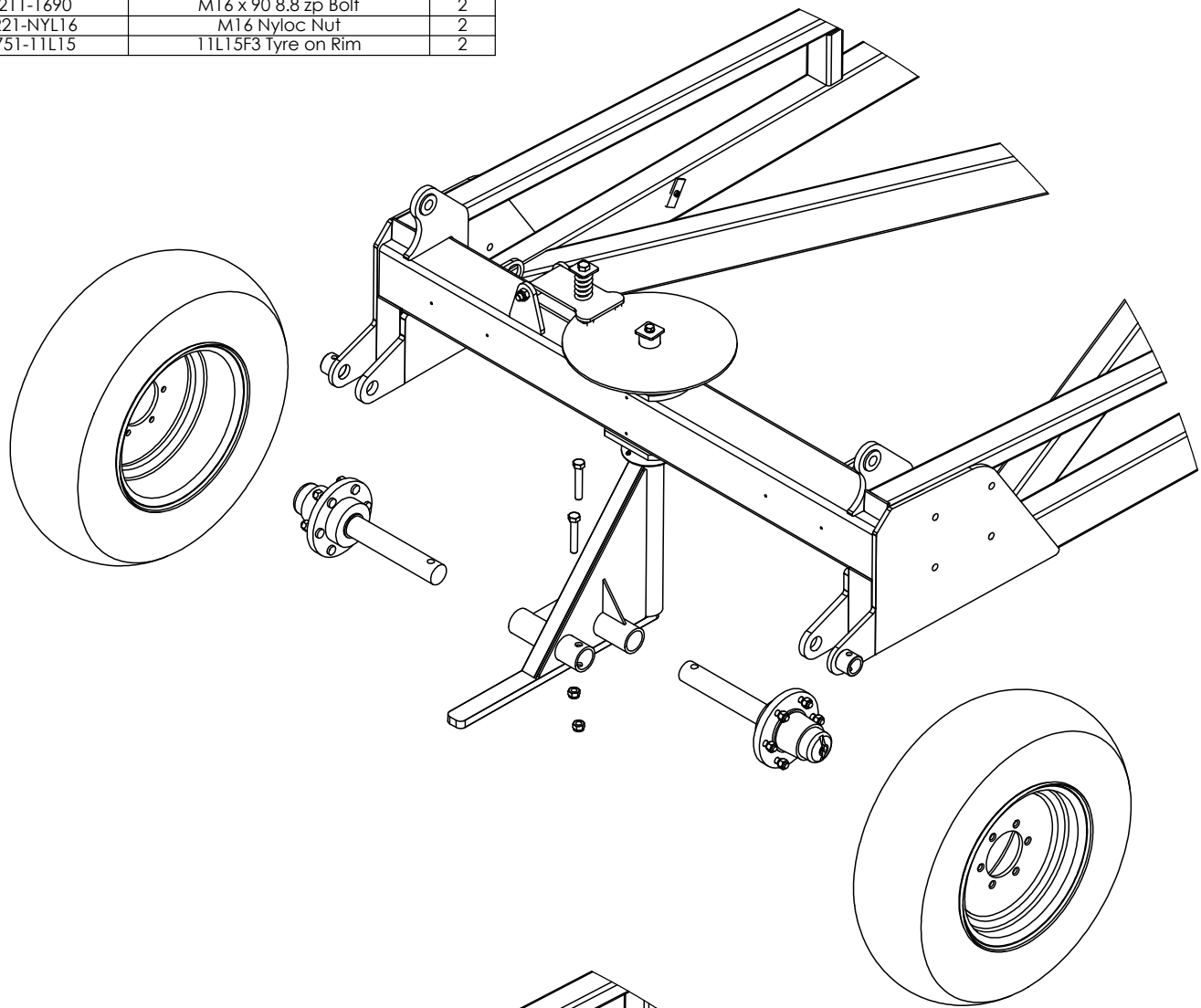

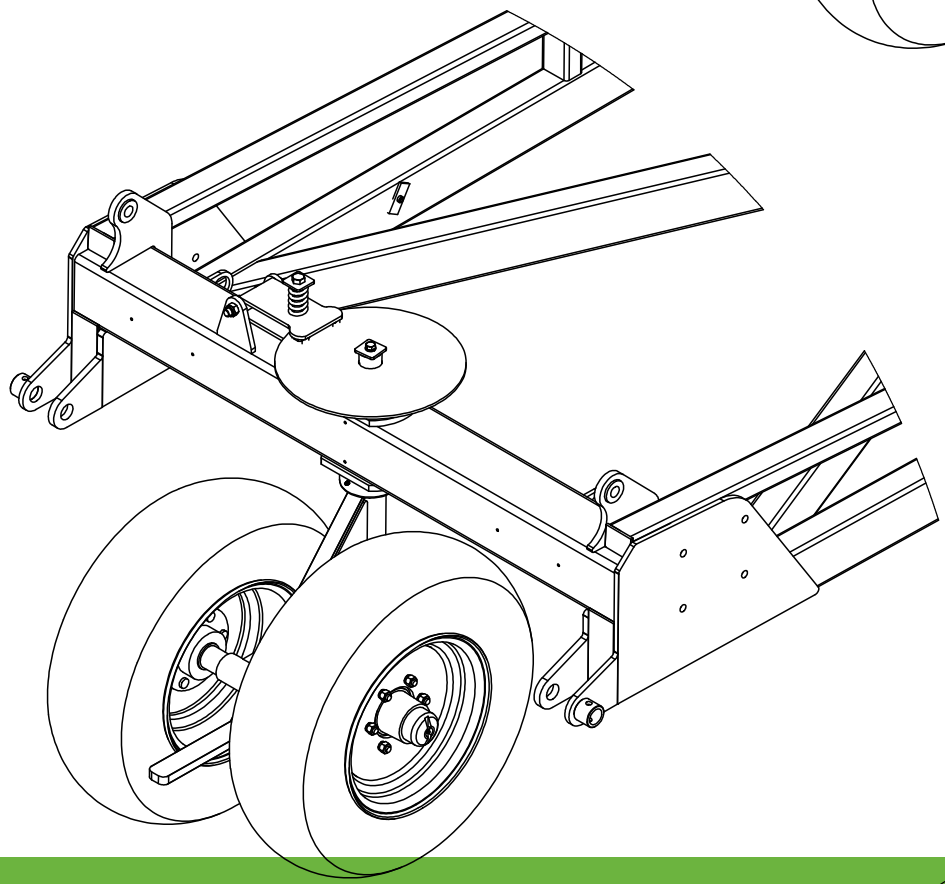

PART NUMBER	DESCRIPTION	QTY.
0801-10-08-175	Tail Frame Pivot pin	2
0810-10	Rear Tail	1
0211-1265	M12 x 65 8.8 zp Bolt	2
0221-NYL12	M12 Nyloc Nut	2
0261-PINC1363	Cotter Pin M13 X 63mm	2

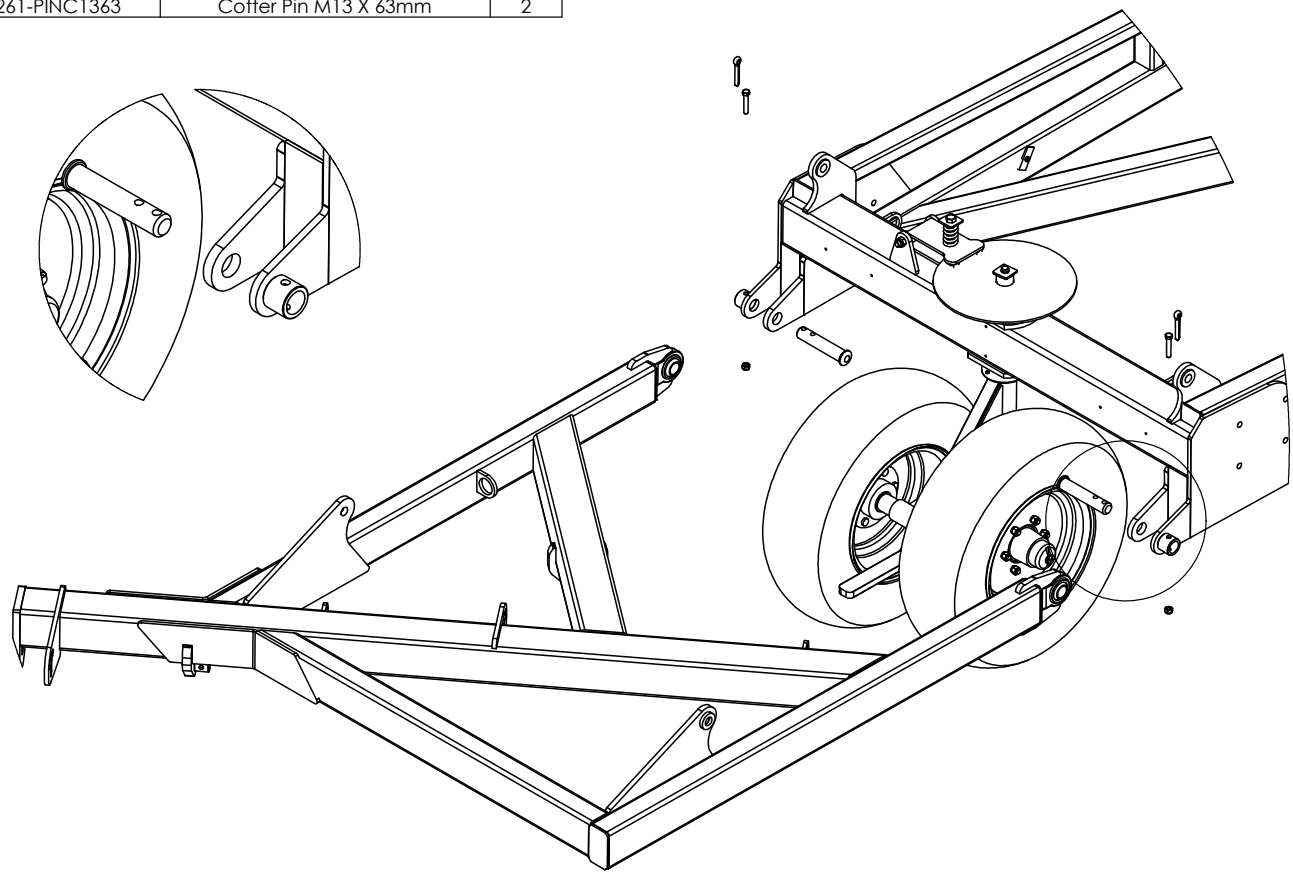

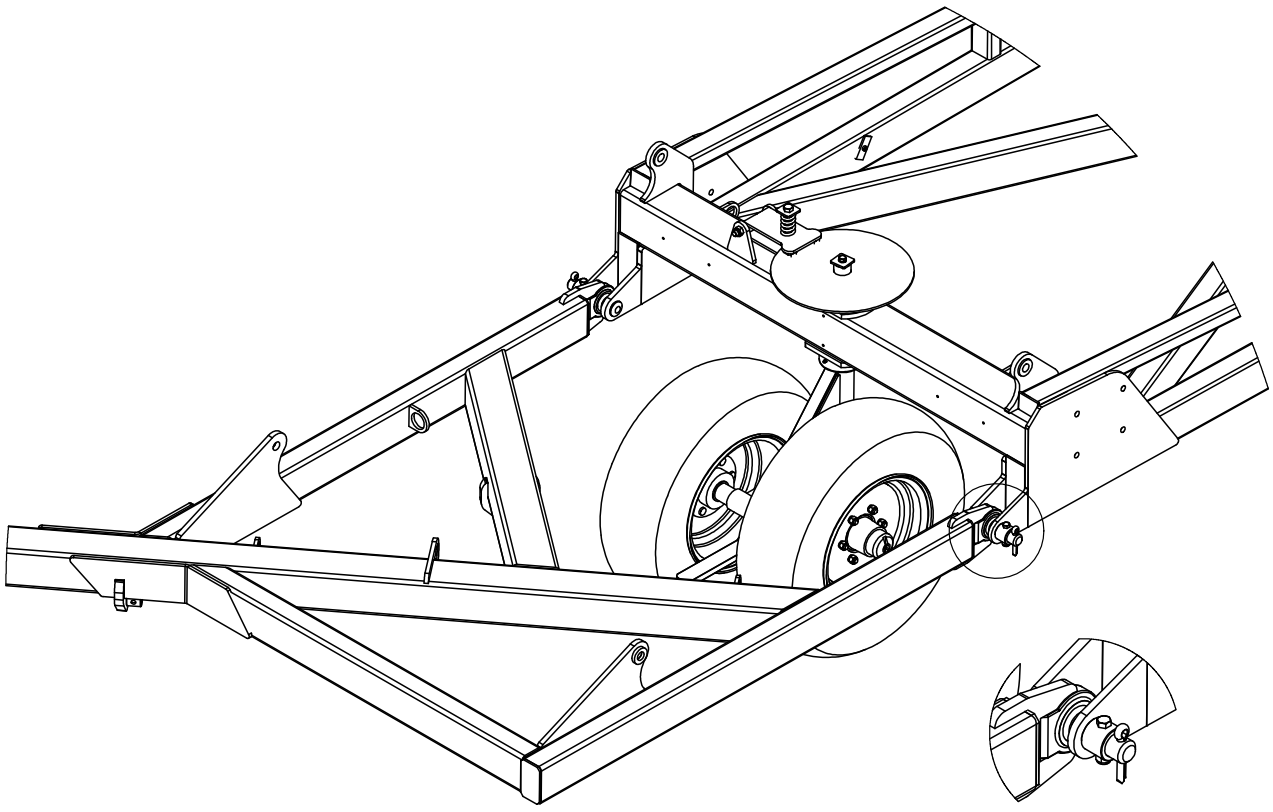

TRAVEL

PART NUMBER	DESCRIPTION	QTY.
0801-44082938	Clevis Pin 1" x 75mm	4
0511-RCLIP4	R Clip 4mm	4
0311-2958	Hyd Cylinder 3.5" x 24" Side Port	2

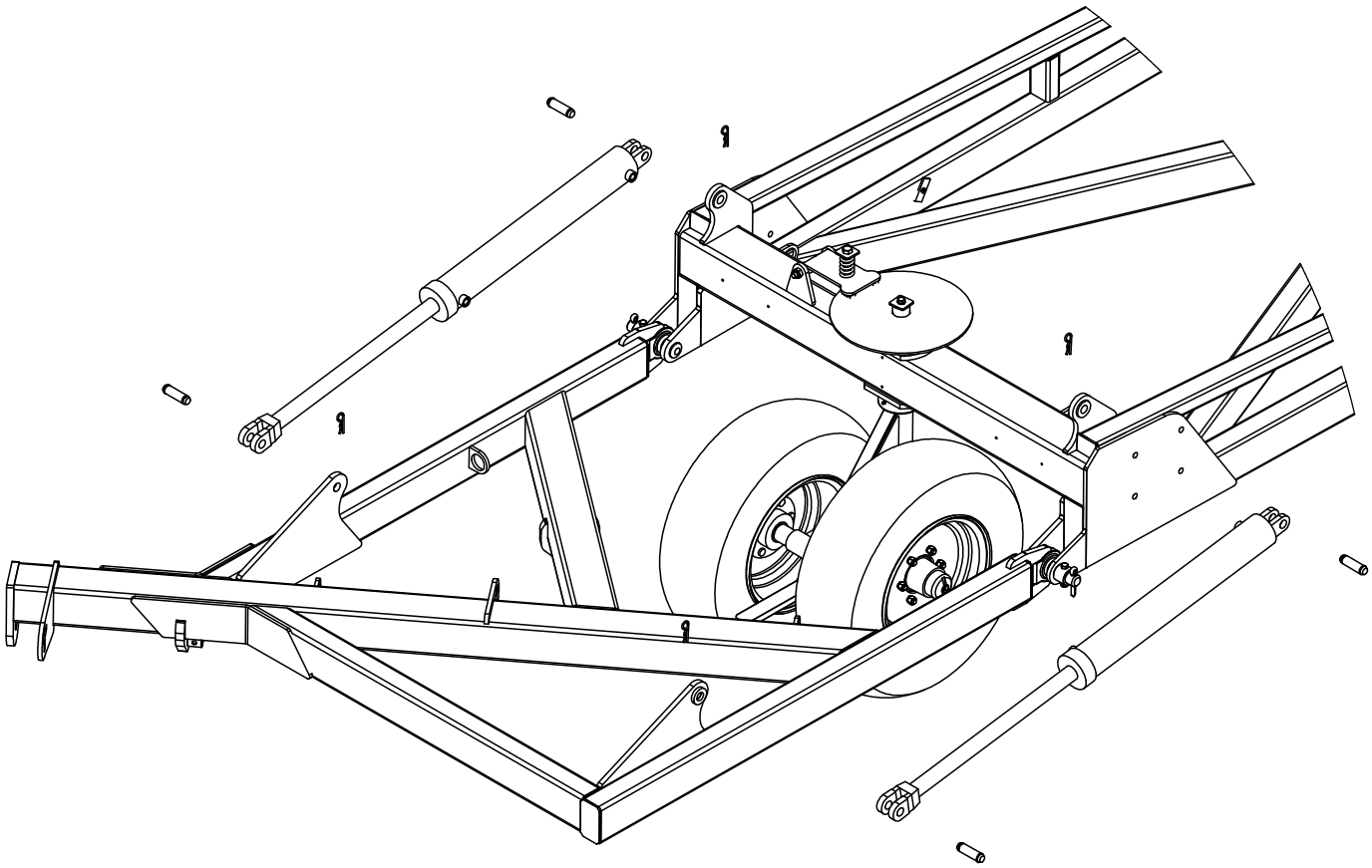

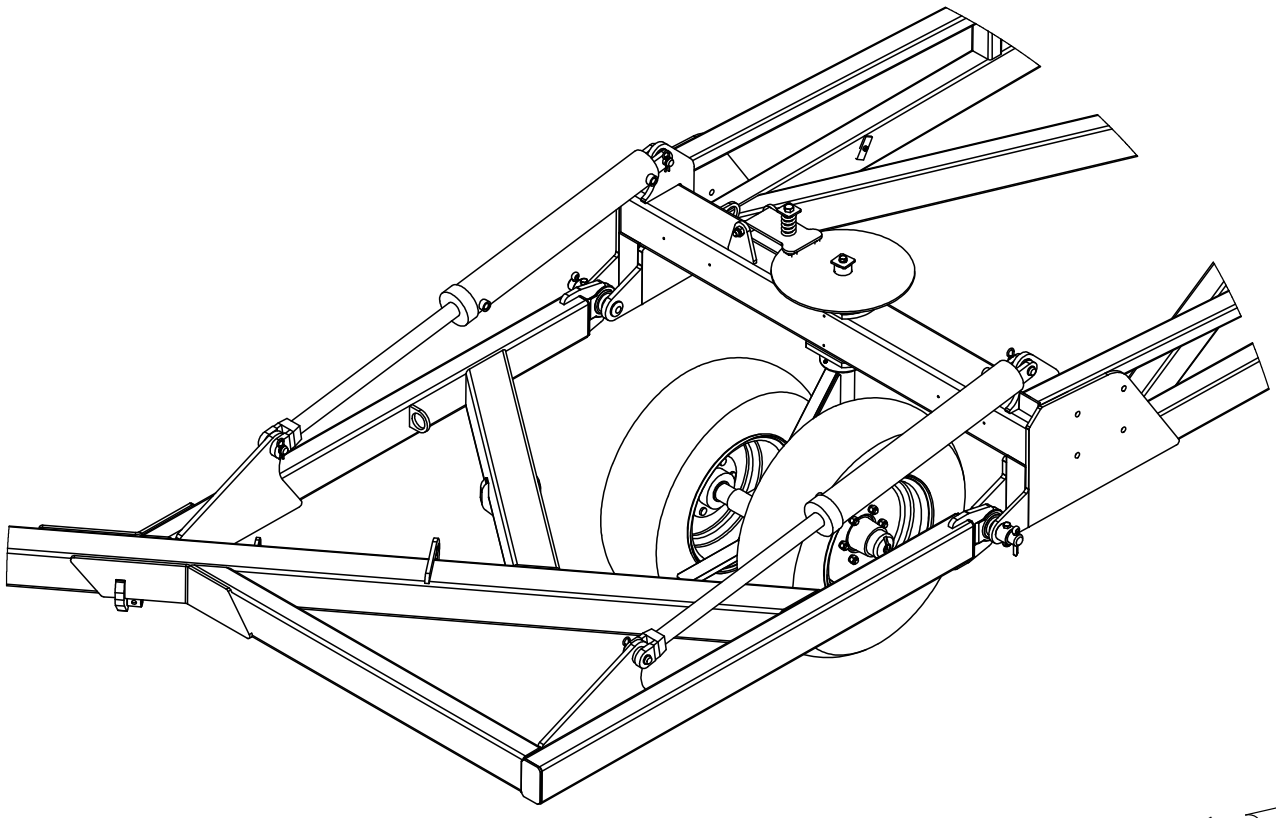

TRAVEL

PART NUMBER	DESCRIPTION	QTY.
0800-235	Rear Tail Guard	2
0271-1215577	U-Bolt M12 x 155 x 77	6
0221-NYL12	M12 Nyloc Nut	12
0231-F12	M12 Flat Washer	12
0800-220.1	Tail Chain Stop Guard	1

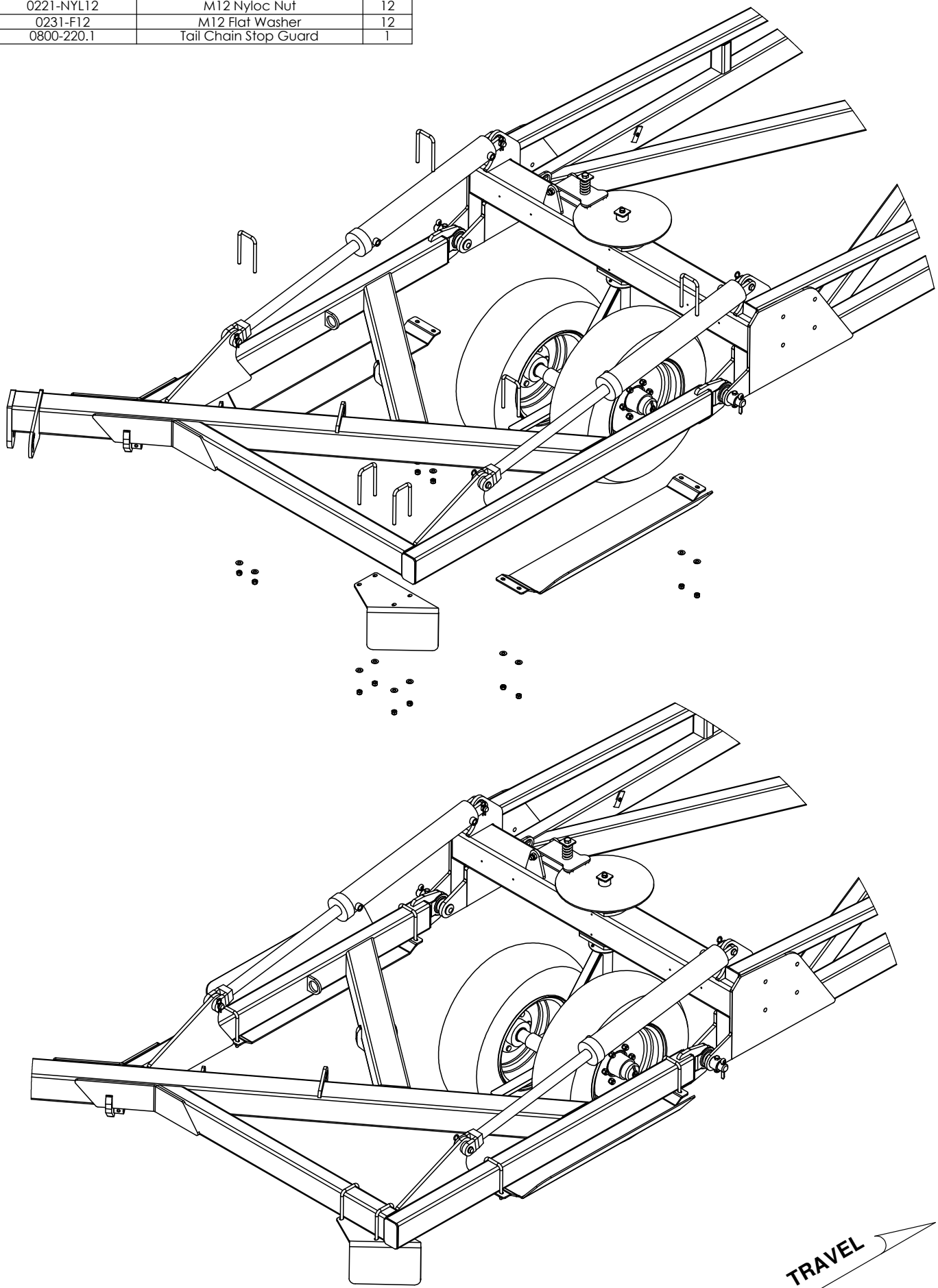

PART NUMBER	DESCRIPTION	QTY.
0801-44082938	Clevis Pin 1" x 75mm	2
0511-RCLIP4	R Clip 4mm	2
0801-KE-0307-1	Clevis Pin 25mm x 75mm	1
0231-F24	M24 zp Flat Washer	1
0261-PINC550	Cotter Pin M5 x 50	1
0311-5041	2 1/2" x 6" Hydraulic Cylinder Side Port	1
0211-1250	M12 x 50 8.8 zp Bolt	2
0221-NYL12	M12 Nyloc Nut	2
0800-120.3	Module Lift Plate	1
0800-167.3	Module Cylinder Guard	1

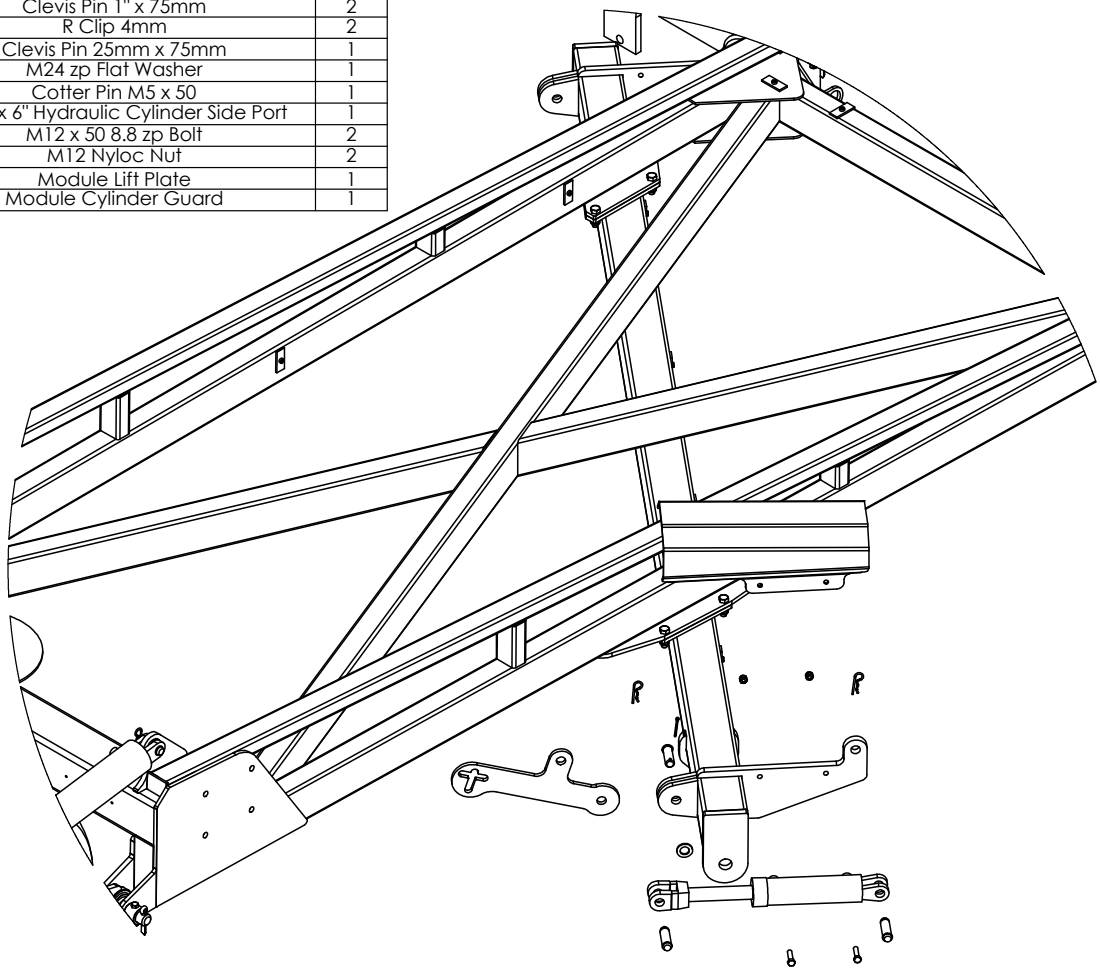

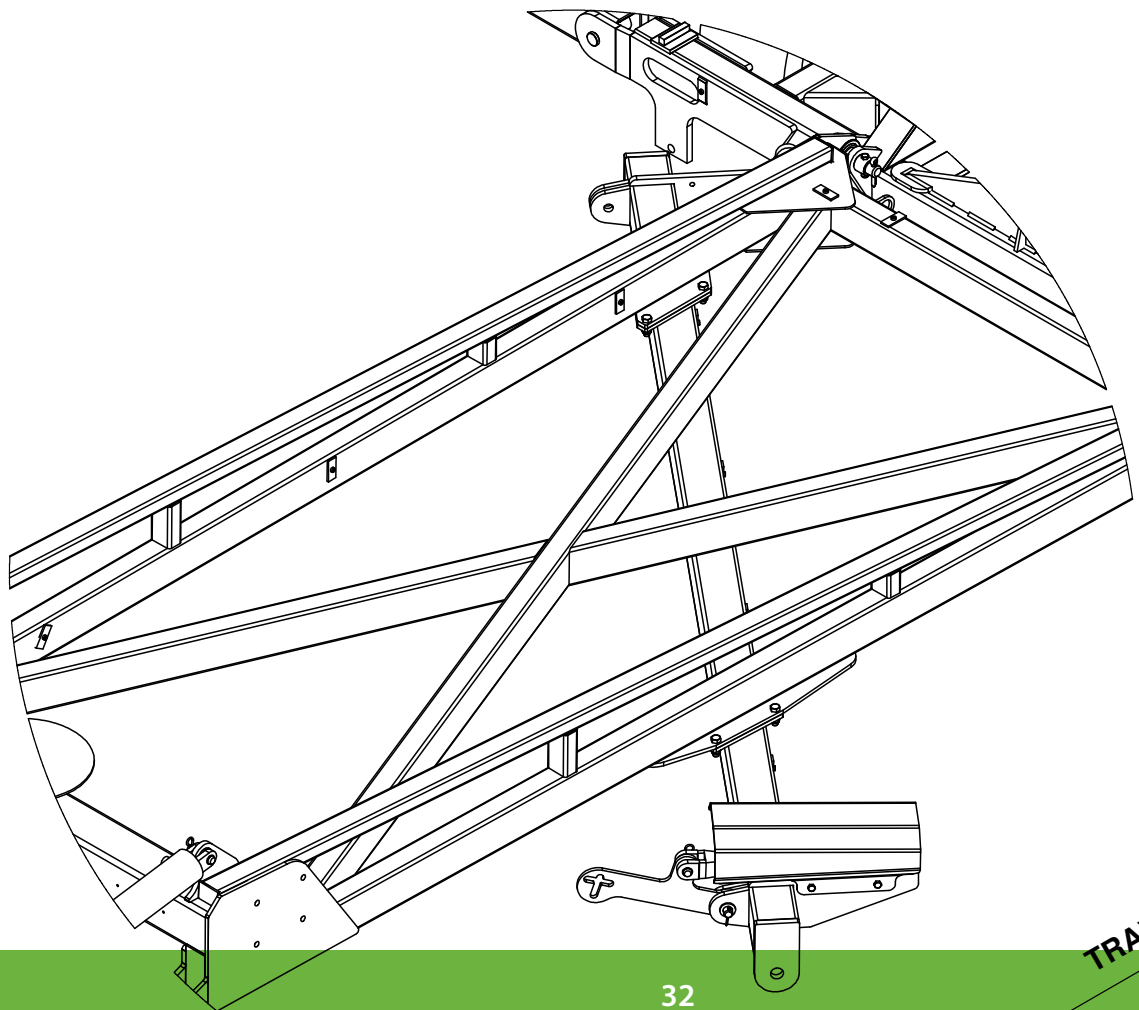

PART NUMBER	DESCRIPTION	QTY.
0801-44082938	Clevis Pin 1" x 75mm	2
0511-RCLIP4	R Clip 4mm	2
0801-KE-0307-1	Clevis Pin 25mm x 75mm	1
0311-5041	2 1/2" x 6" Hydraulic Cylinder Side Port	1
0231-F24	M24 zp Flat Washer	1
0261-PINC550	Cotter Pin M5 x 50	1
0800-120.3	Module Lift Plate	1

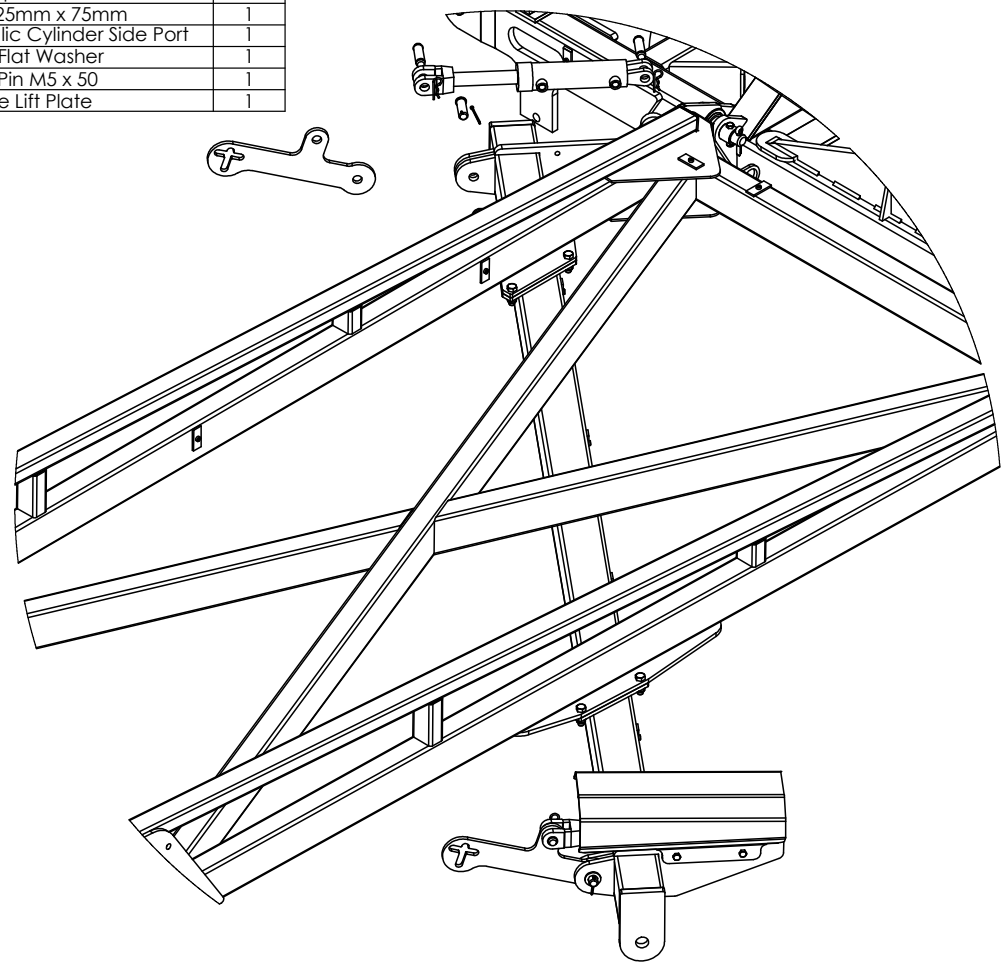

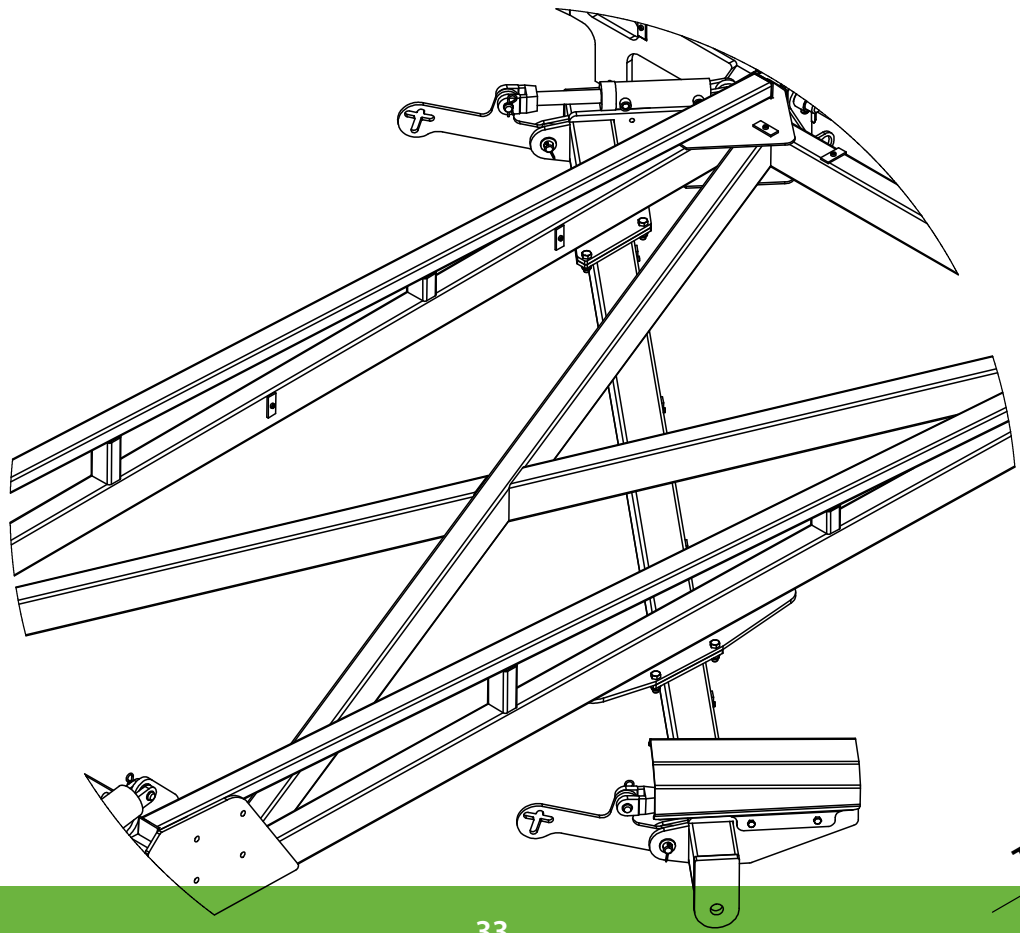

PART NUMBER	DESCRIPTION	QTY.
0801-44082938	Clevis Pin 1" x 75mm	2
0511-RCLIP4	R Clip 4mm	2
0801-KE-0307-1	Clevis Pin 25mm x 75mm	1
0311-5041	2 1/2" x 6" Hydraulic Cylinder Side Port	1
0231-F24	M24 zp Flat Washer	1
0261-PINC550	Cotter Pin M5 x 50	1
0800-120.3	Module Lift Plate	1

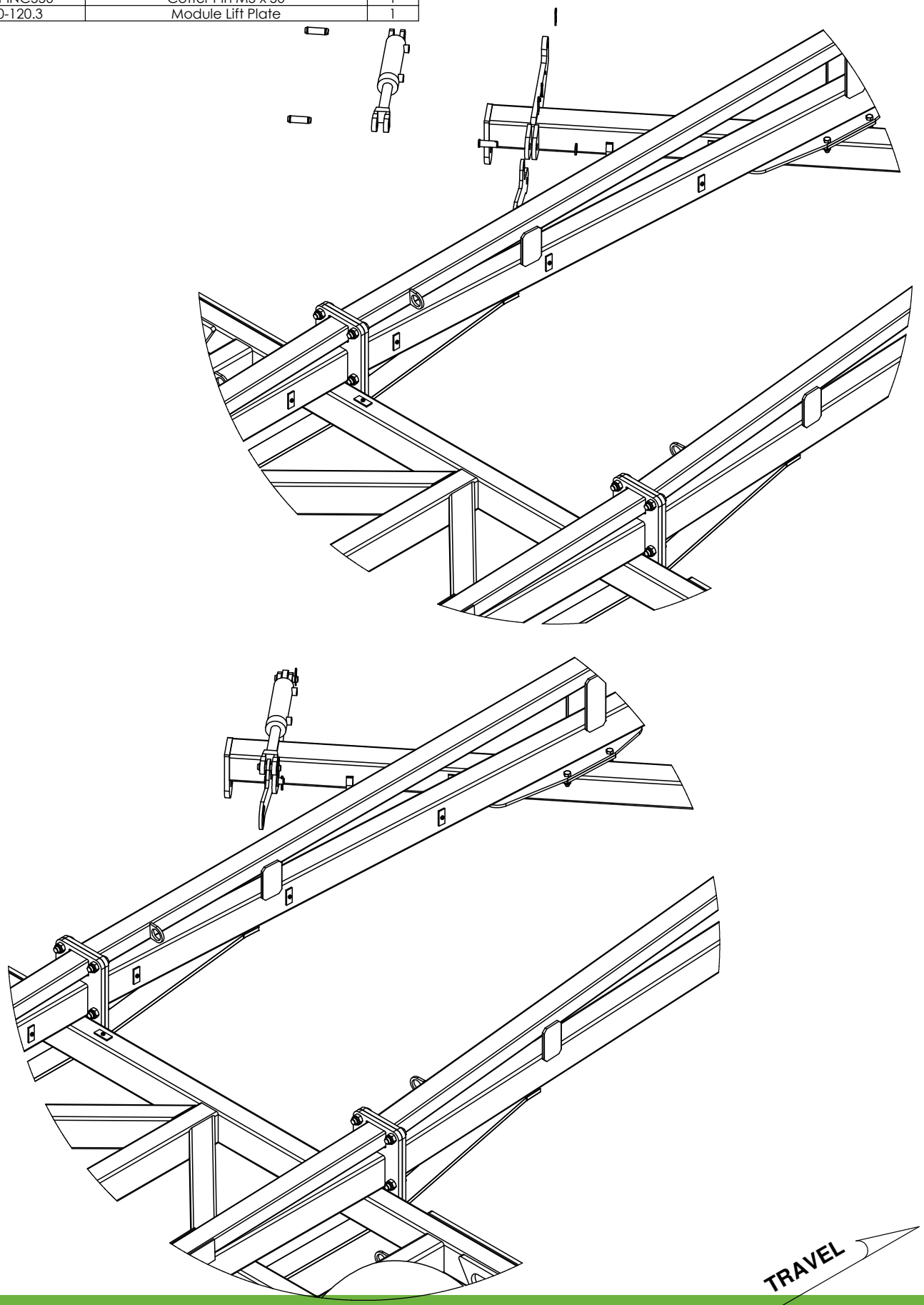

PART NUMBER	DESCRIPTION	QTY.
0231-F12	M12 Flat Washer	8
0810-17-45	45' Chain Carrier Beam	1
0810-17L	Chain Carrier Bolt on End	2
0215-CH1240	M12 x 40 Coach Head Bolt	8
0221-NYL12	M12 Nyloc Nut	8

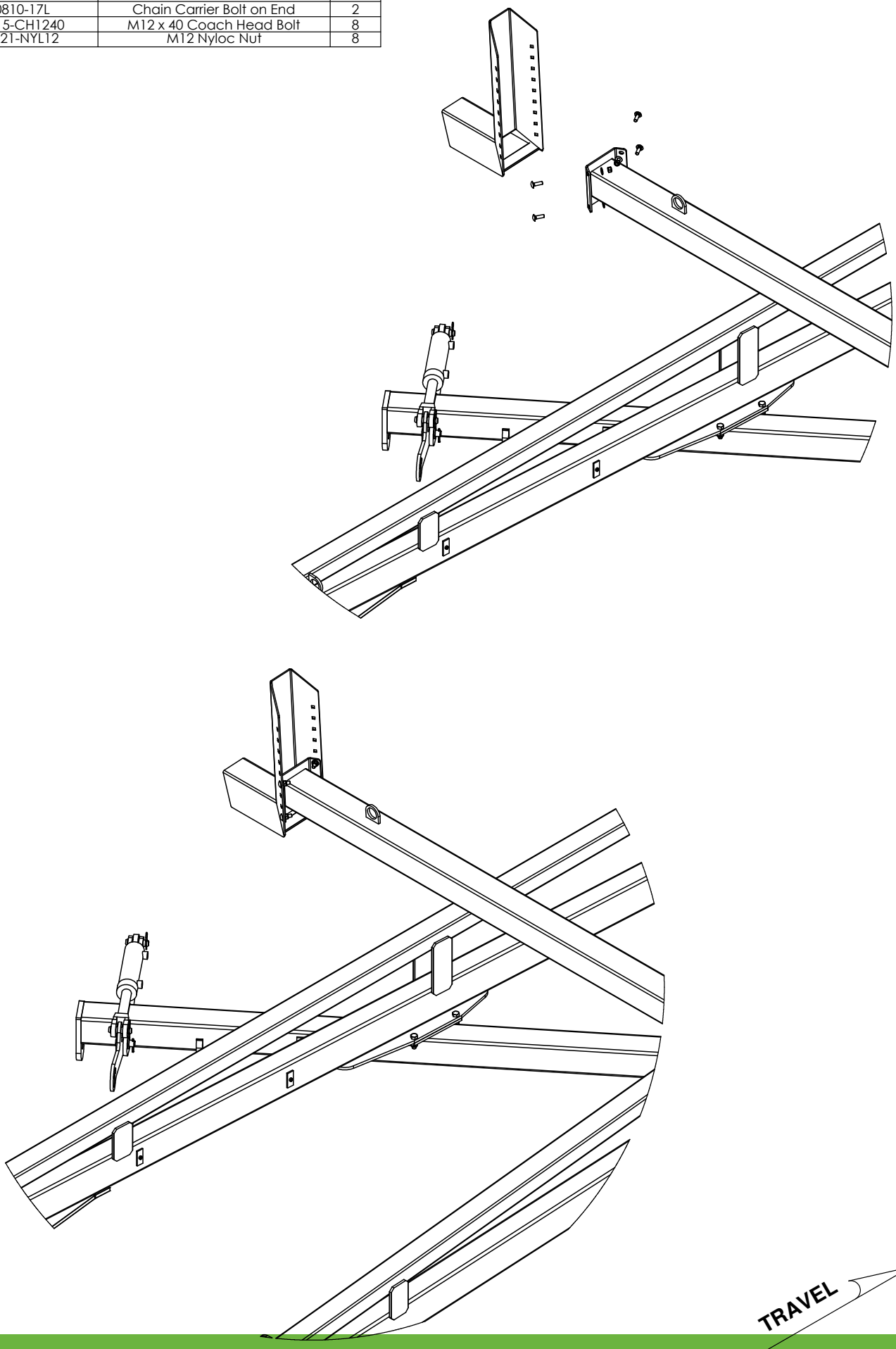

PART NUMBER	DESCRIPTION	QTY.
0800-139.1	Chain Carrier Mount Plate	2
0271-16112104	U-Bolt M16 x 112 x 104	4
0271-16160127	U-Bolt M16 x 160 x 127	4
0231-F12	M12 zp Flat Washer	16
0221-NYL16	M16 Nyloc Nut	16

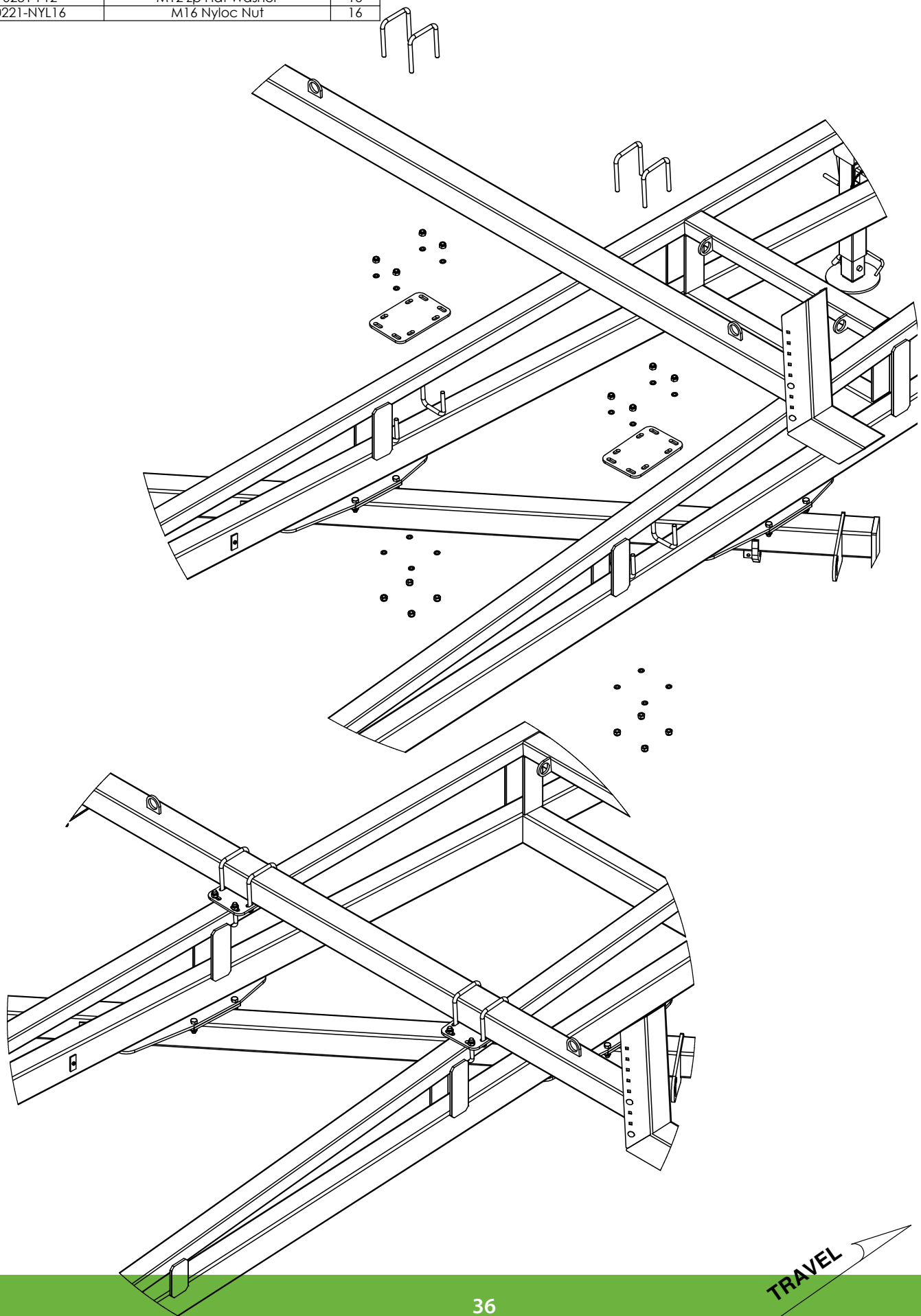

PART NUMBER	DESCRIPTION	QTY.
0231-F12	M12 Flat Washer	8
0221-NYL12	M12 Nyloc Nut	8
0810-19L	Left Hand M	1
0810-18R	Right Hand M	1
0271-12107104	U-Bolt M12 x 107 x 104	4

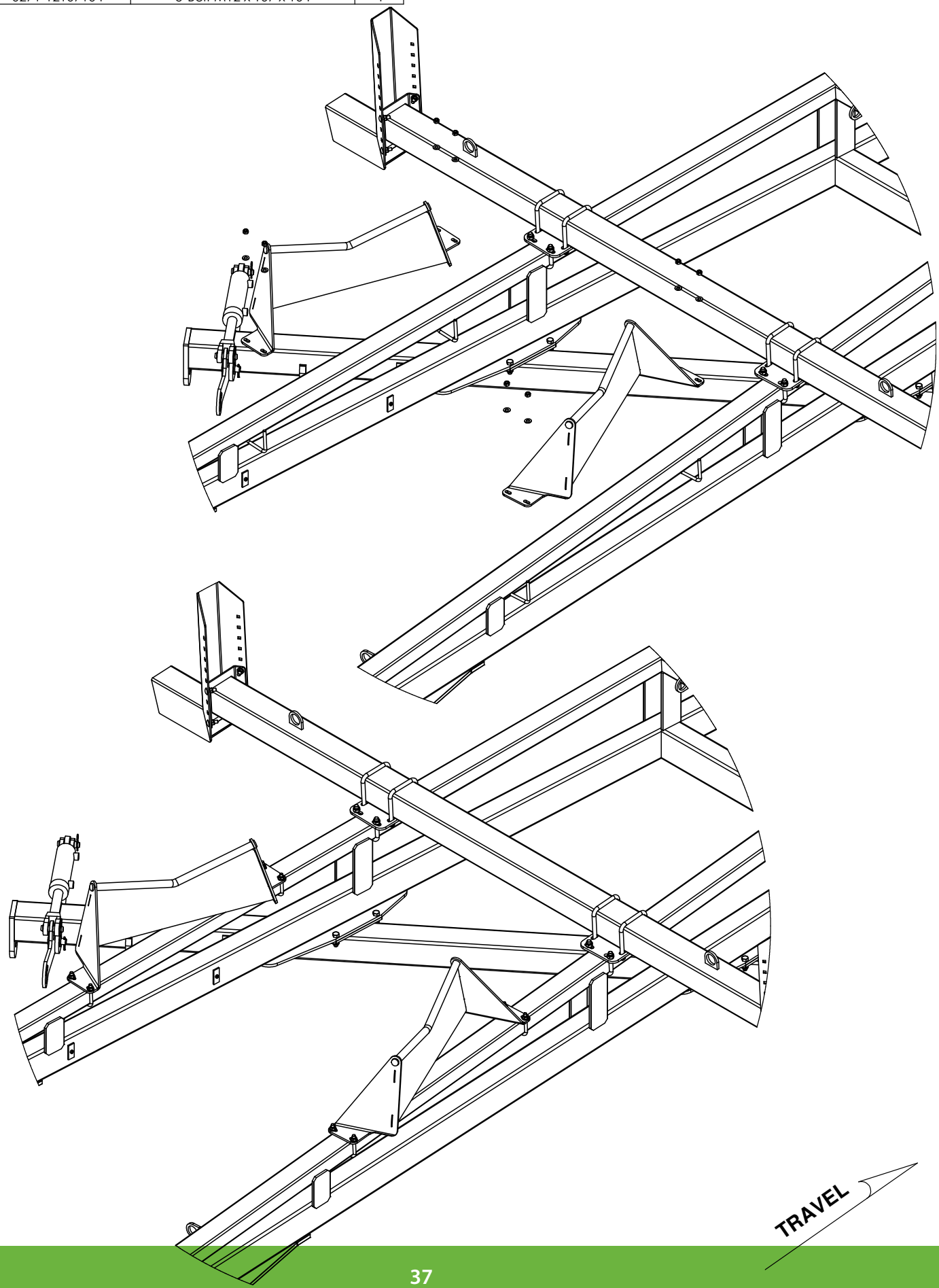

PART NUMBER	DESCRIPTION	QTY.
0231-F12	M12 Flat Washer	8
0810-17-45	45' Chain Carrier Beam	1
0810-17L	Chain Carrier Bolt on End	2
0215-CH1240	M12 x 40 Coach Head Bolt	8
0221-NYL12	M12 Nyloc Nut	8

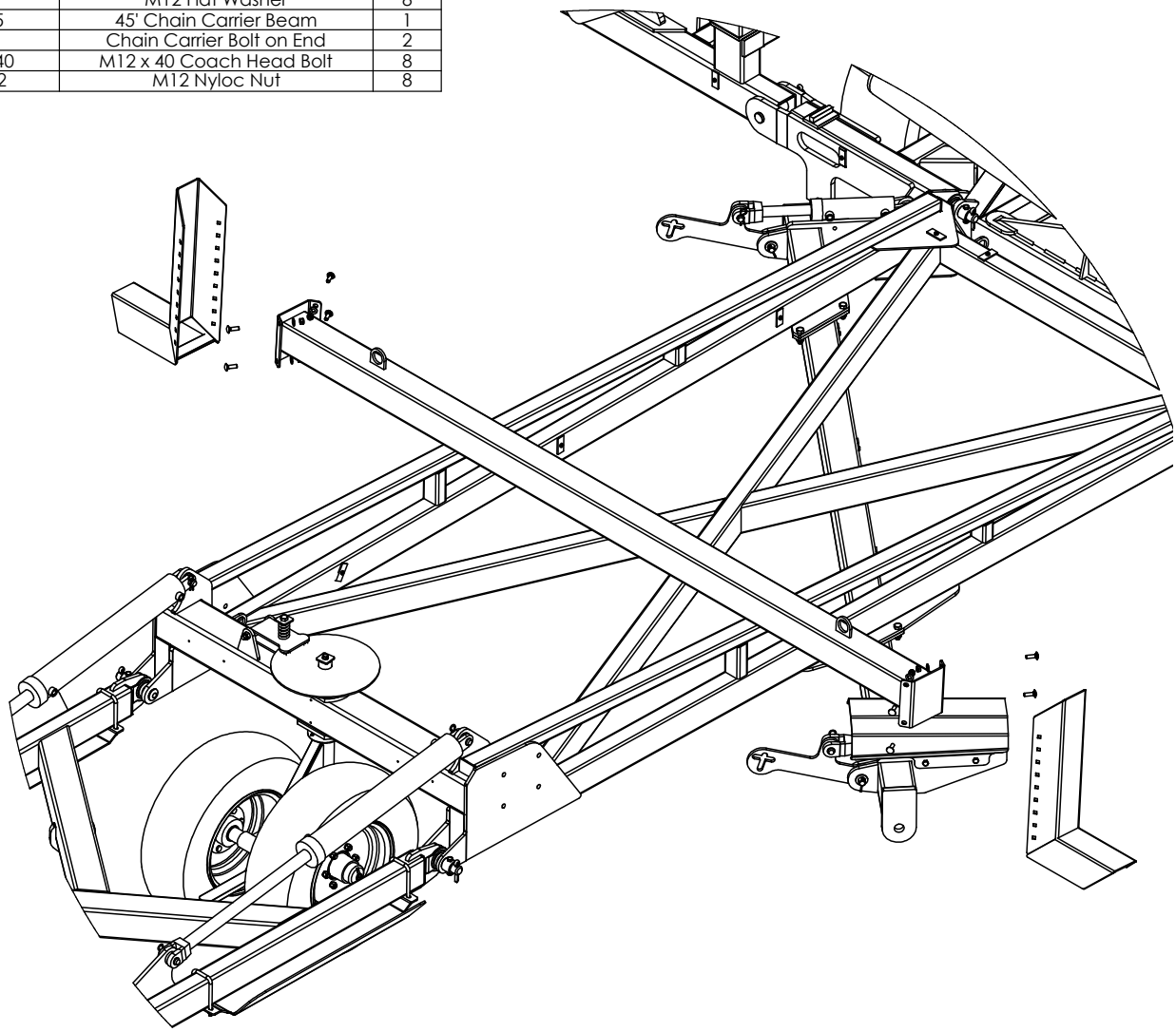

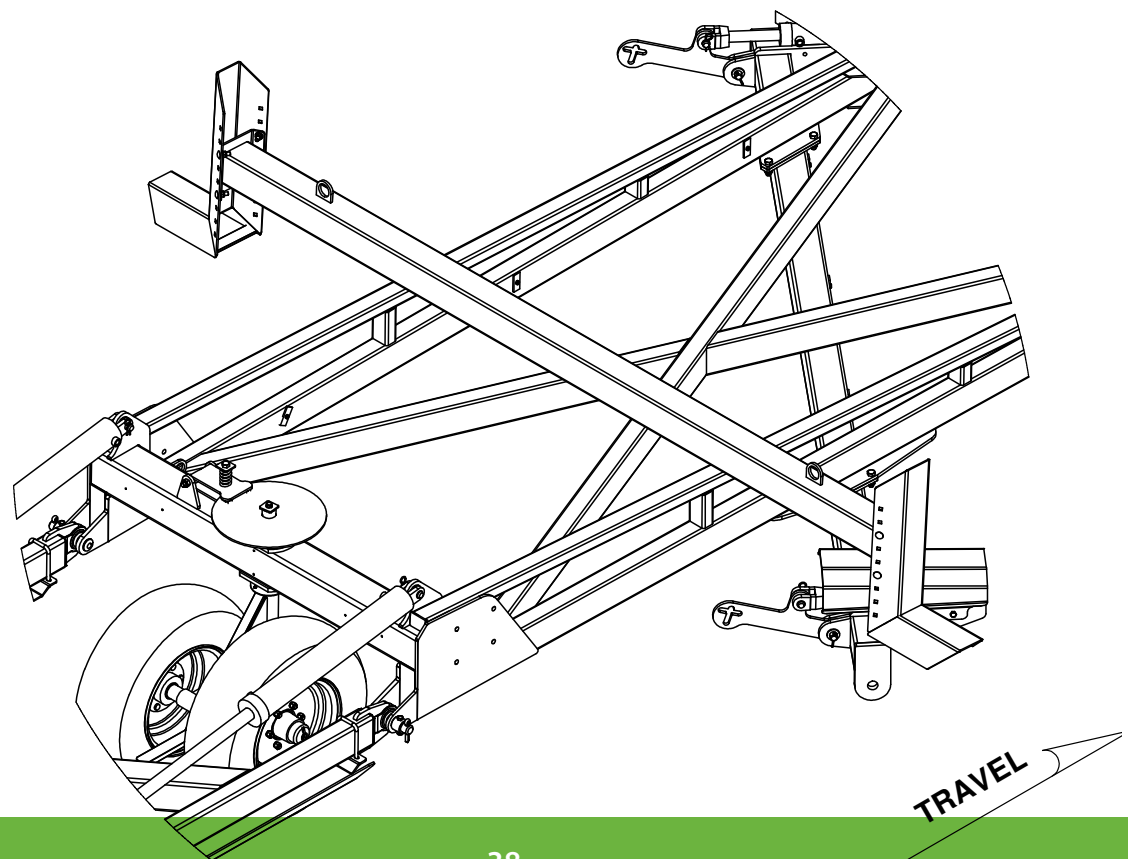

PART NUMBER	DESCRIPTION	QTY.
0800-139.1	Chain Carrier Mount Plate	2
0271-16160127	U-Bolt M16 x 160 x 127	4
0221-NYL16	M16 Nyloc Nut	16
0231-F12	M12 zp Flat Washer	16
0271-168577	U-Bolt M16 x 85 Deep x 77 Wide	4

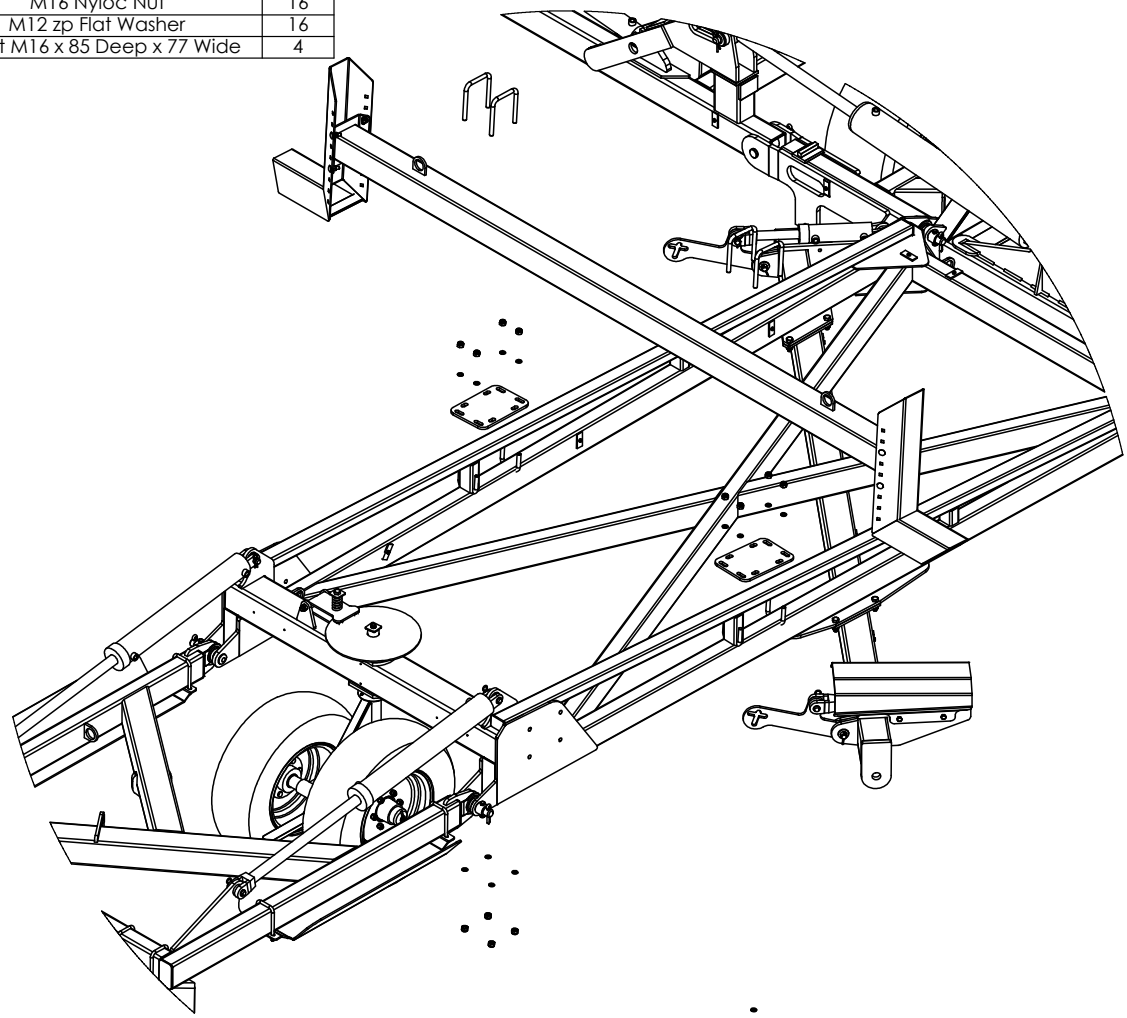

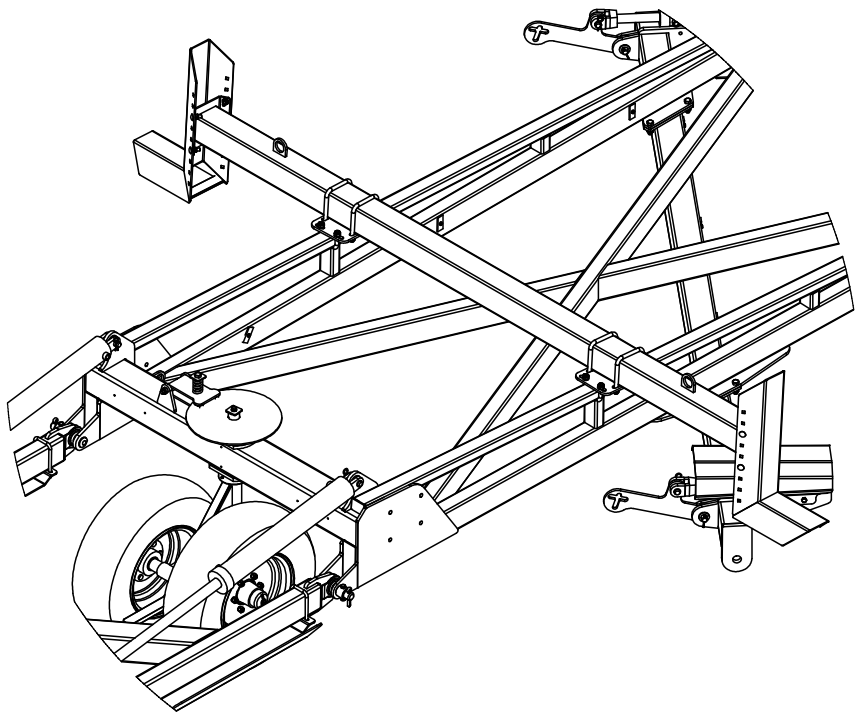

PART NUMBER	DESCRIPTION	QTY.
PC10-19	Rear Frame M	2
0271-1215577	U-Bolt M12 x 155 x 77	4
0231-F12	M12 zp Flat Washer	16
0221-NYL12	M12 Nyloc Nut	16
0810-19L	Left Hand M	1
0810-18R	Right Hand M	1
0271-128577	U-Bolt M12 x 85 Wide x 77 Deep	4

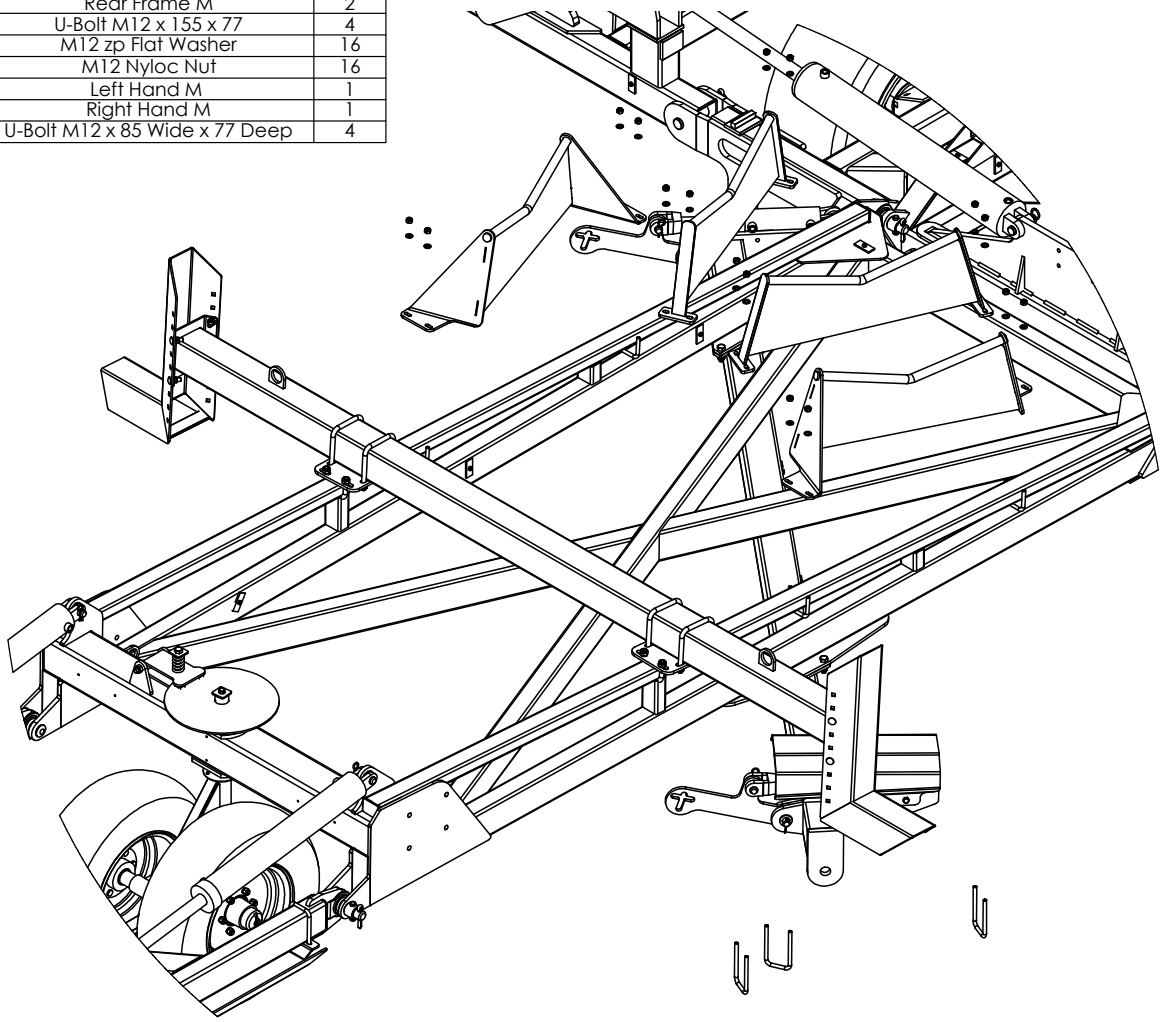

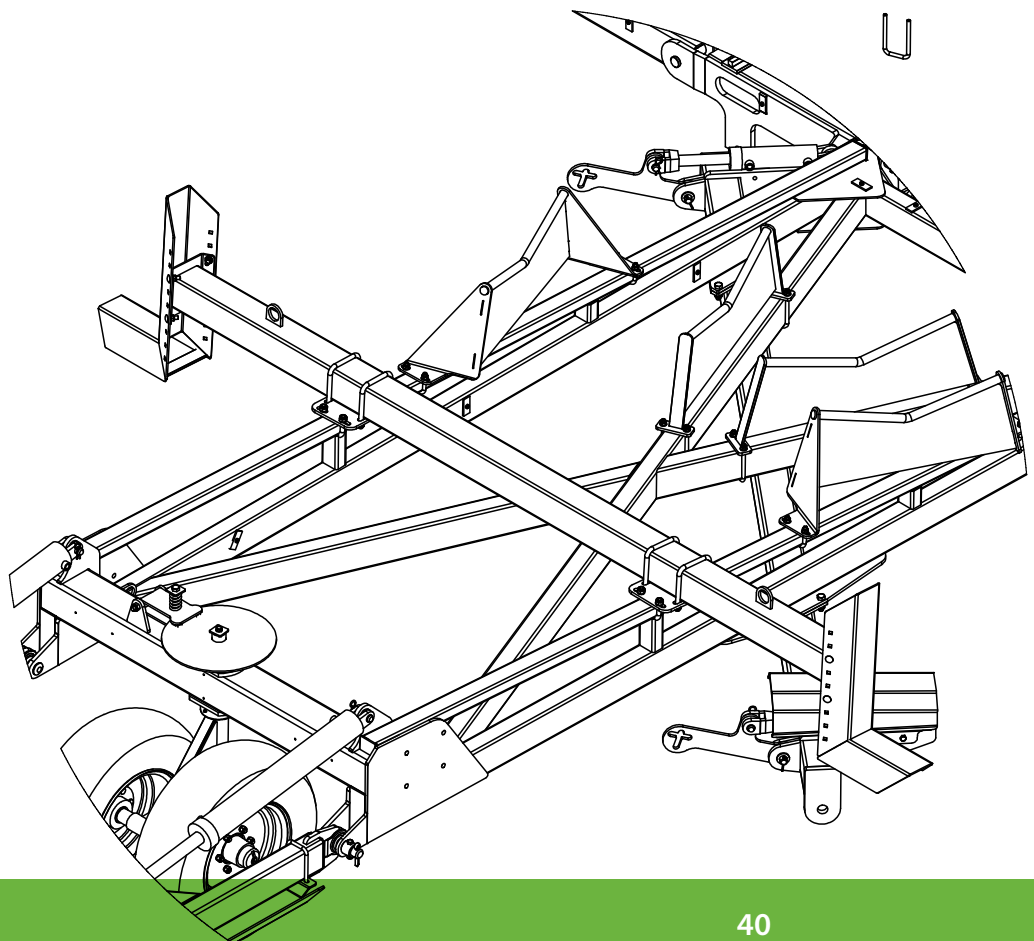

TRAVEL

PART NUMBER	DESCRIPTION	QTY.
0810-109R	RH Outrigger With OS Sign Frame	1
0810-109L	LH Outrigger With OS Sign Frame	1
0231-F12	M12 Flat Washer	8
0810-17L	Chain Carrier Bolt on End	2
0211-1650	M16 x 50 8.8 zp Bolt	8
0221-NYL16	M16 Nyloc Nut	8
0215-CH1240	M12 x 40 Coach Head Bolt	8
0221-NYL12	M12 Nyloc Nut	8

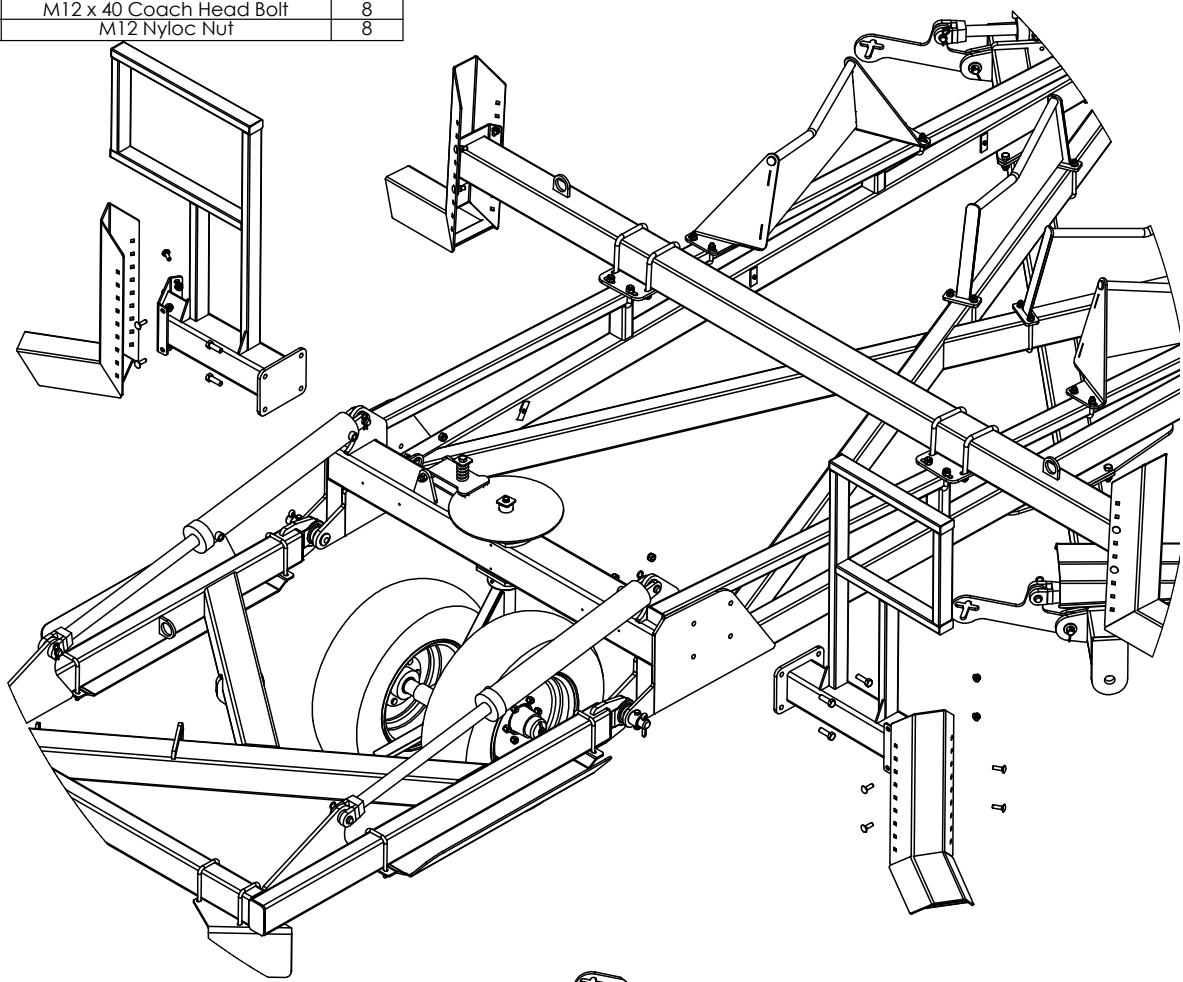

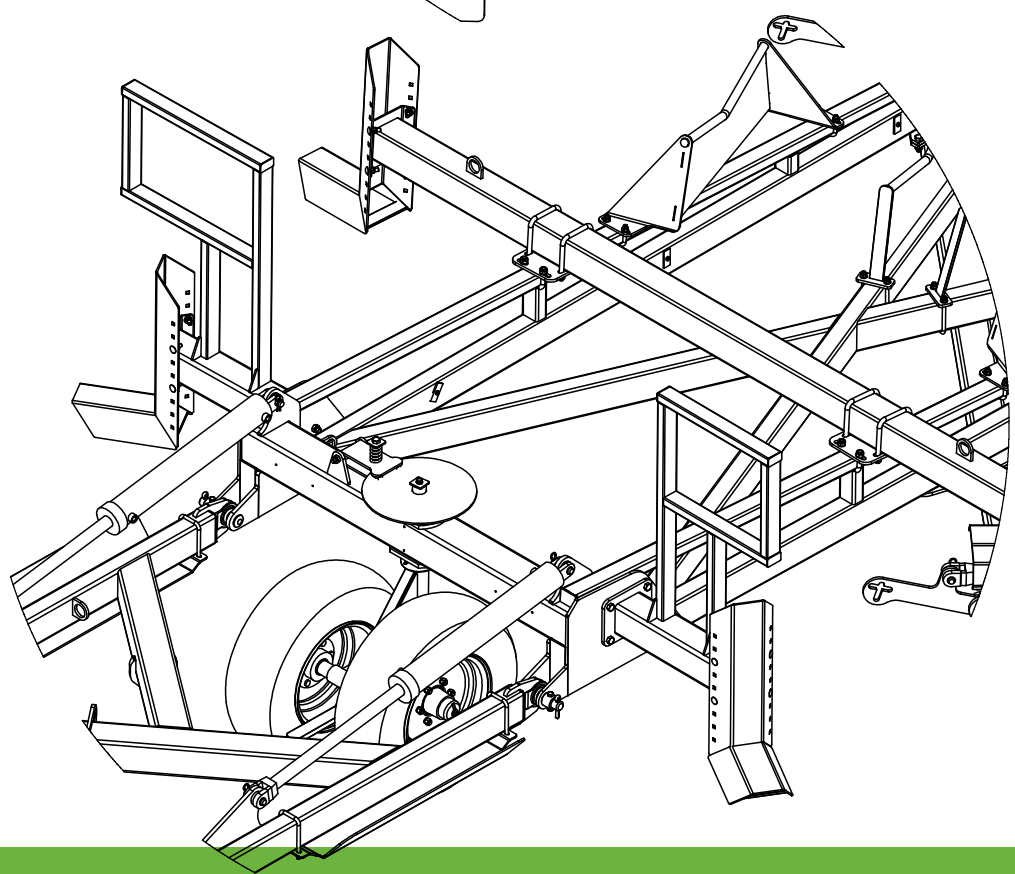

TRAVEL

PART NUMBER	DESCRIPTION	QTY.
0221-NYL20	M20 Nyloc Nut	6
0801-PS50	50mm Drop Leg Spacer	2
0801-PS25	25mm Drop leg Spacer	4
0810-26	LH Chain Adjusting Lug	1
0810-27	RH Chain Adjusting Lug	1
0810-24	LH Drop Leg	1
0810-25	RH Drop Leg	1
0211-24140	M24 x 140 8.8 zp Bolt	2
0221-NYL24	M24 Nyloc Nut	2
0243-STS8G1.25ZP	Poly Spacer clamp Screw	6
0802-DCTP-20	Disc Chain Tie Plate Link 20mm	2
0802-PCHB55	20mm Bolt Swivel Unit	2
0801-PCDCS55	Disc Chain Spacer	2
0211-20110 ST	M20 x 110mm 10.9g Short Thread	6

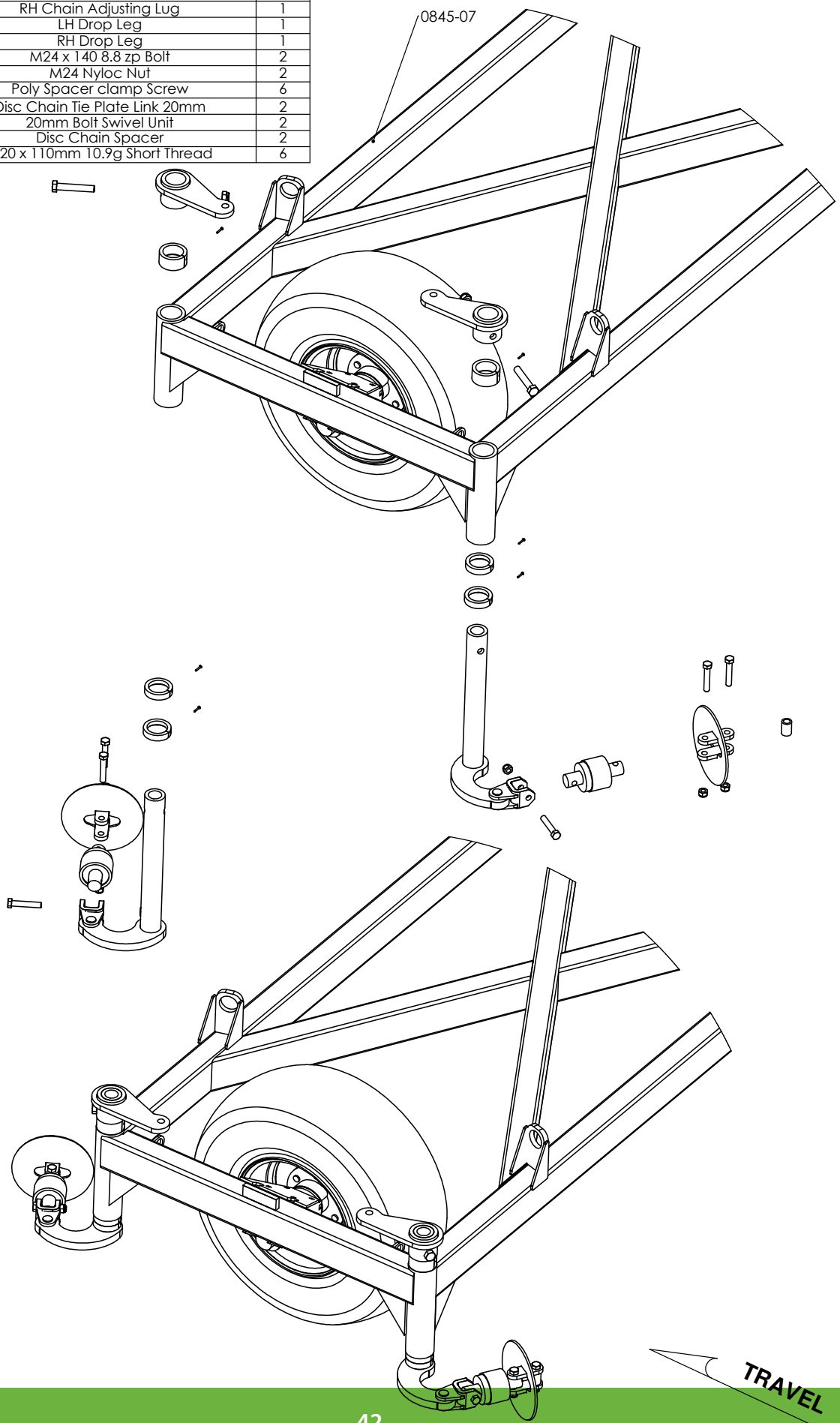

PART NUMBER	DESCRIPTION	QTY.
0801-KE-0307-1	Clevis Pin 25mm x 75mm	2
0801-XK9261S	20mm Compression Spring	2
0801-KE0805-3	Tensioner Cup Male	2
0801-KE0805-4	Tensioner Cup Female	2
0801-PCHTA-B6	6tpi 1.25" Tension Bolt	2
0801-PCHTA-BC	Tension Assembly Body	2
0801-PCHTA-SB	Steel Spring Retaining Bush	2
0801-PCHTA-N6	6tpi Lock Nut	6
0261-PINC550	Cotter Pin M5 x 50	2

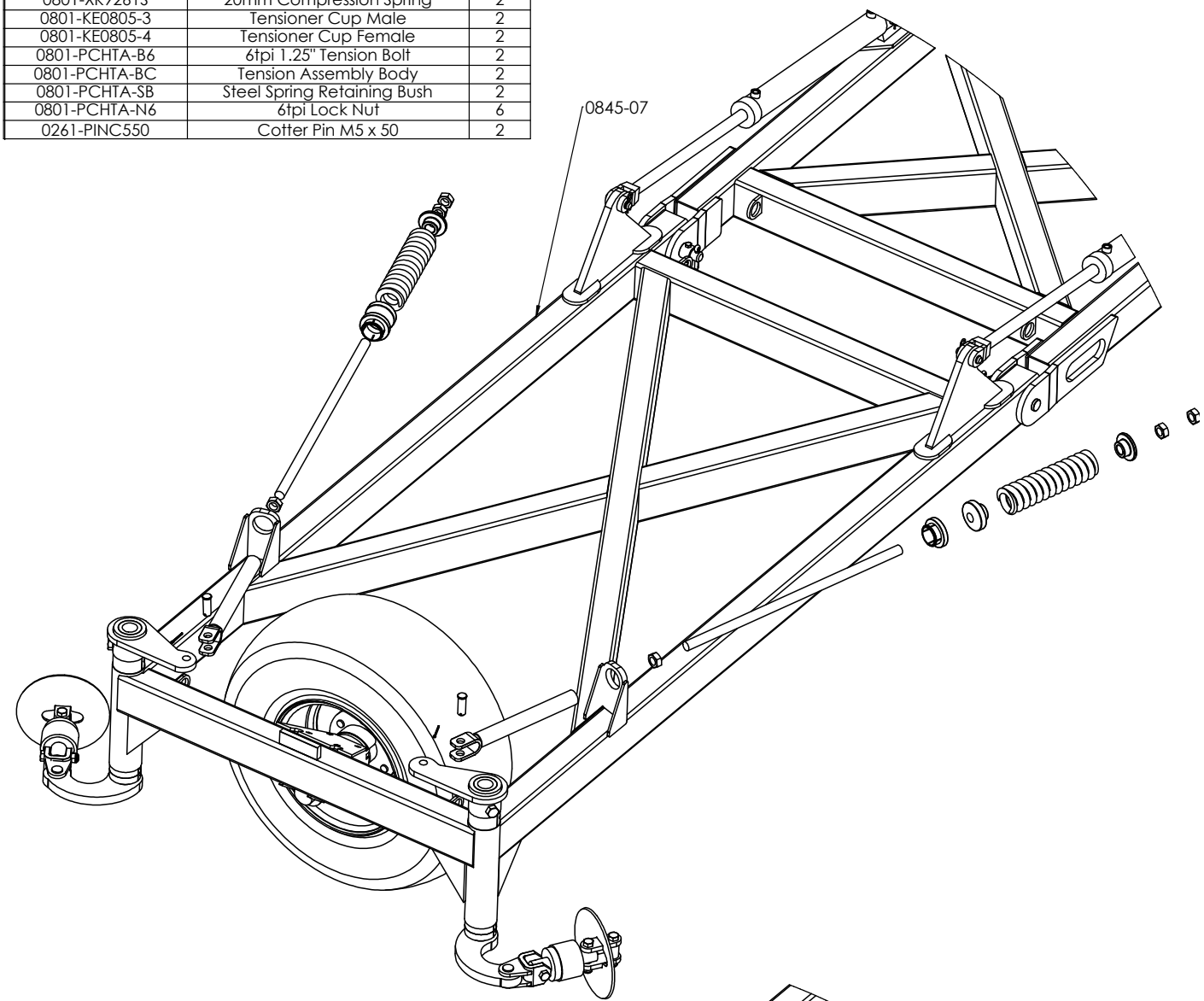

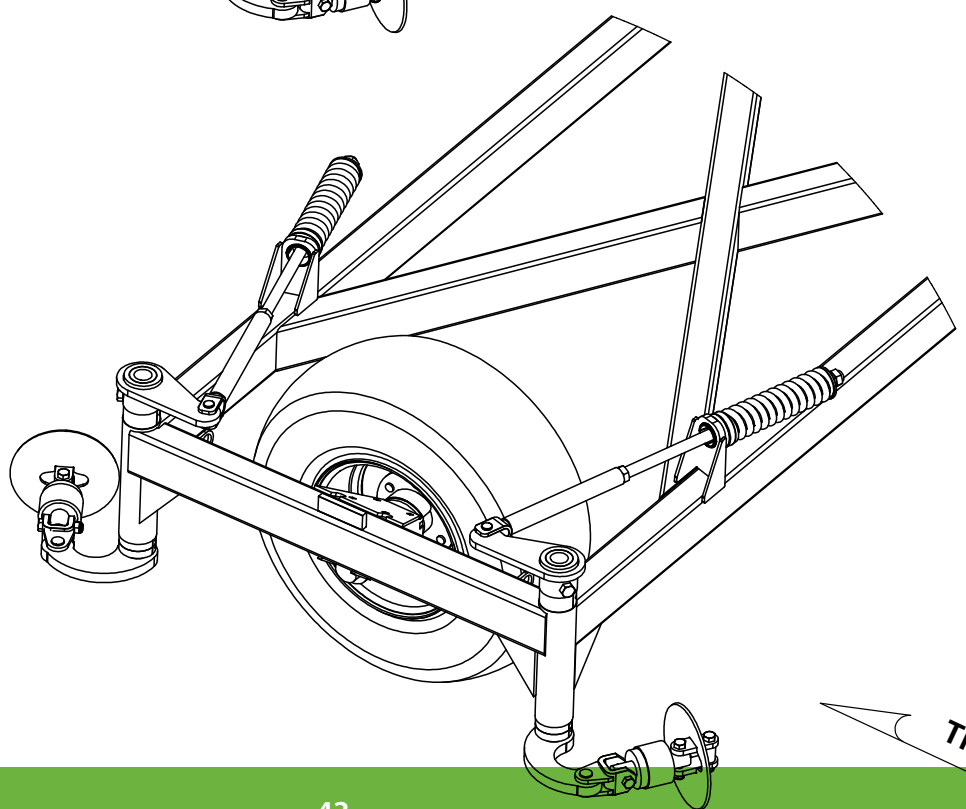

PART NUMBER	DESCRIPTION	QTY.
0801-PS50	50mm Drop Leg Spacer	2
0801-PS25	25mm Drop leg Spacer	4
0810-26	LH Chain Adjusting Lug	1
0810-27	RH Chain Adjusting Lug	1
0810-24	LH Drop Leg	1
0810-25	RH Drop Leg	1
0243-STS8G1.25ZP	Poly Spacer clamp Screw	6
0802-DCTP-20	Disc Chain Tie Plate Link 20mm	2
0802-PCHB55	20mm Bolt Swivel Unit	2
0801-PCDCS55	Disc Chain Spacer	2
0211-24140	M24 x 140 8.8 zp Bolt	2
0221-NYL24	M24 Nyloc Nut	2
0211-20110 ST	M20 x 110mm 10.9g Short Thread	6
0221-NYL20	M20 Nyloc Nut	6

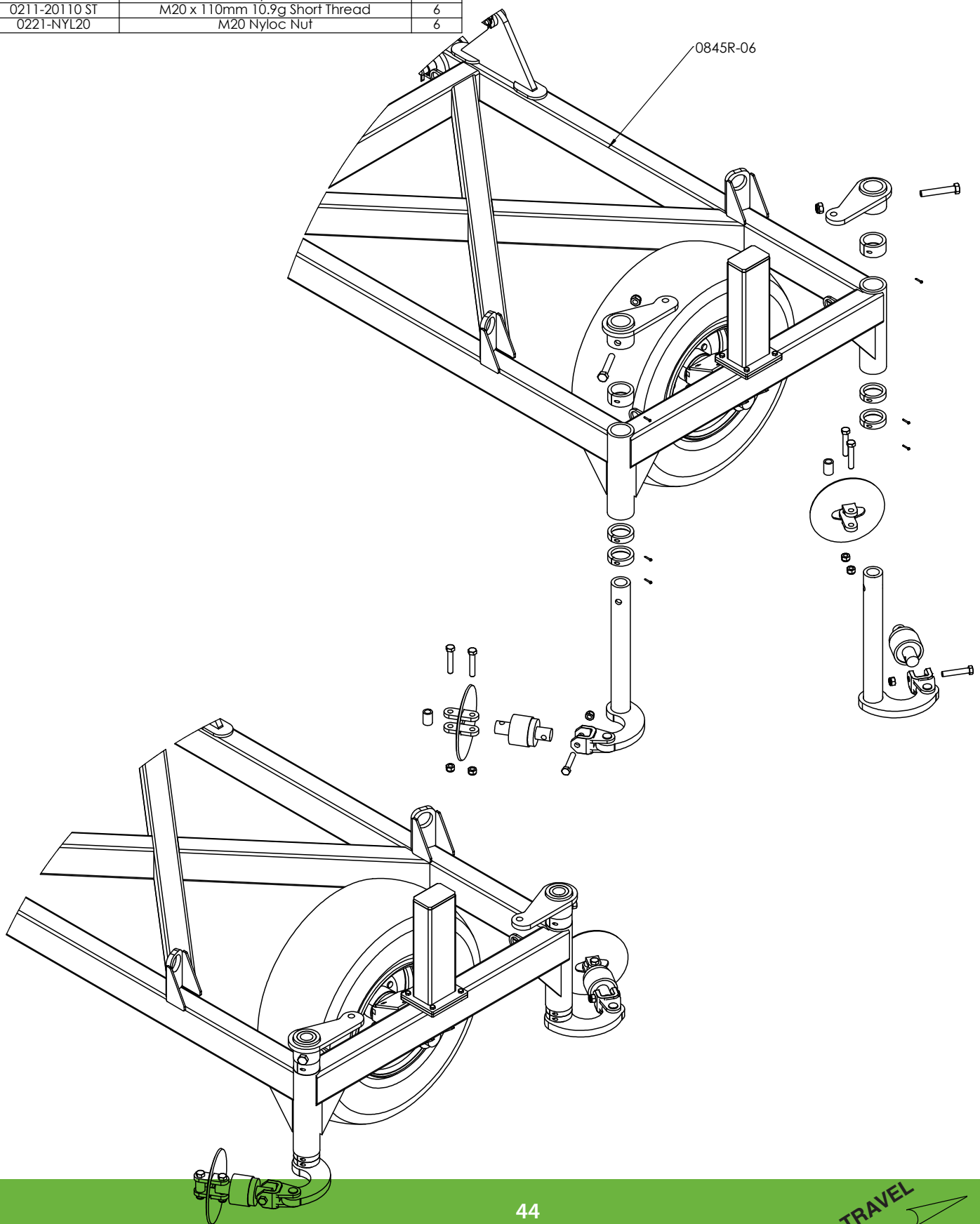

PART NUMBER	DESCRIPTION	QTY.
0801-KE-0307-1	Clevis Pin 25mm x 75mm	2
0801-XK9261S	20mm Compression Spring	2
0801-KE0805-3	Tensioner Cup Male	2
0801-KE0805-4	Tensioner Cup Female	2
0801-PCHTA-B6	6tpi 1.25" Tension Bolt	2
0801-PCHTA-BC	Tension Assembly Body	2
0801-PCHTA-SB	Steel Spring Retaining Bush	2
0801-PCHTA-N6	6tpi Lock Nut	6
0261-PINC550	Cotter Pin M5 x 50	2

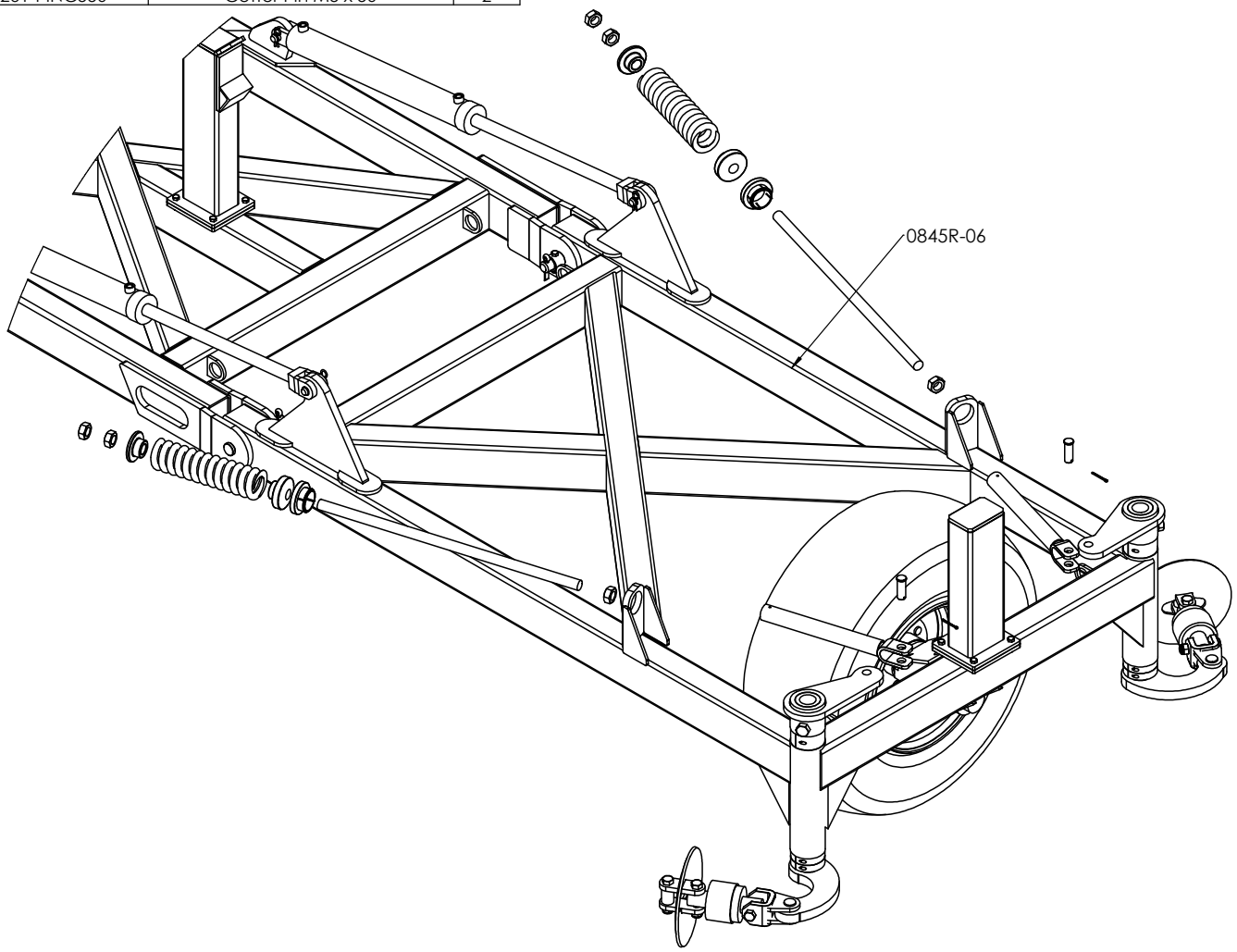

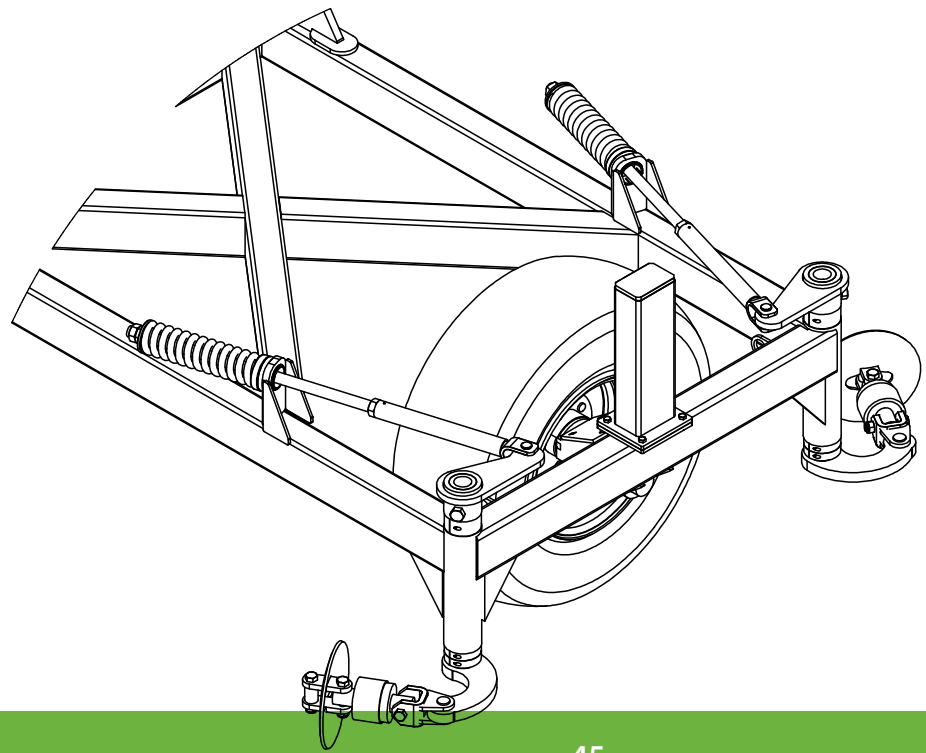

TRAVEL

PART NUMBER	DESCRIPTION	QTY.
0802-DCTP-20	Disc Chain Tie Plate Link 20mm	2
0802-PCHB55	20mm Bolt Swivel Unit	2
0801-PCDCS55	Disc Chain Spacer	2
0810-20	Chain Mount Arm	2
0232-HT13-8	Washer High Tensile 1 3/8"	2
0801-10-51	Chain Mount Pin	2
0211-1265	M12 x 65 8.8 zp Bolt	2
0221-NYL12	M12 Nyloc Nut	2
0801-PCH24MCA	Height Adjusting Chain	2
0211-20110 ST	M20 x 110mm 10.9g Short Thread	6
0221-NYL20	M20 Nyloc Nut	6
0231-S20	M20 zp Spring Washer	2
0211-2050	M20 x 50 8.8 zp Bolt	2

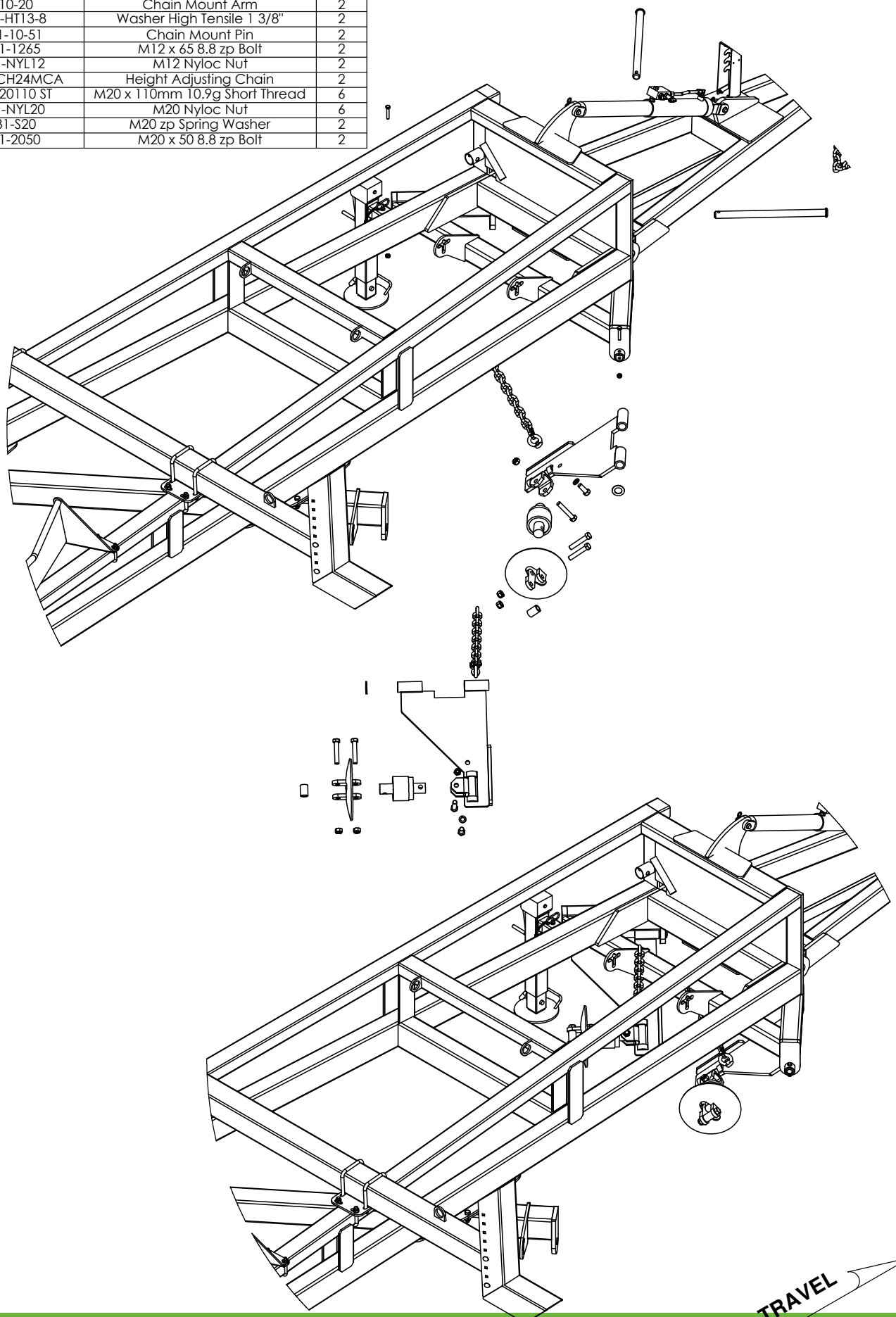

PART NUMBER	DESCRIPTION	QTY.
0802-DCTP-20	Disc Chain Tie Plate Link 20mm	1
0802-PCHB55	20mm Bolt Swivel Unit	1
0801-PCDCS55	Disc Chain Spacer	1
0810-20	Chain Mount Arm	1
0232-HT13-8	Washer High Tensile 1 3/8"	1
0801-10-51	Chain Mount Pin	1
0211-1265	M12 x 65 8.8 zp Bolt	1
0221-NYL12	M12 Nyloc Nut	1
0801-PCH24MCA	Height Adjusting Chain	1
0211-20110 ST	M20 x 110mm 10.9g Short Thread	3
0221-NYL20	M20 Nyloc Nut	3
0231-S20	M20 zp Spring Washer	1
0211-2050	M20 x 50 8.8 zp Bolt	1

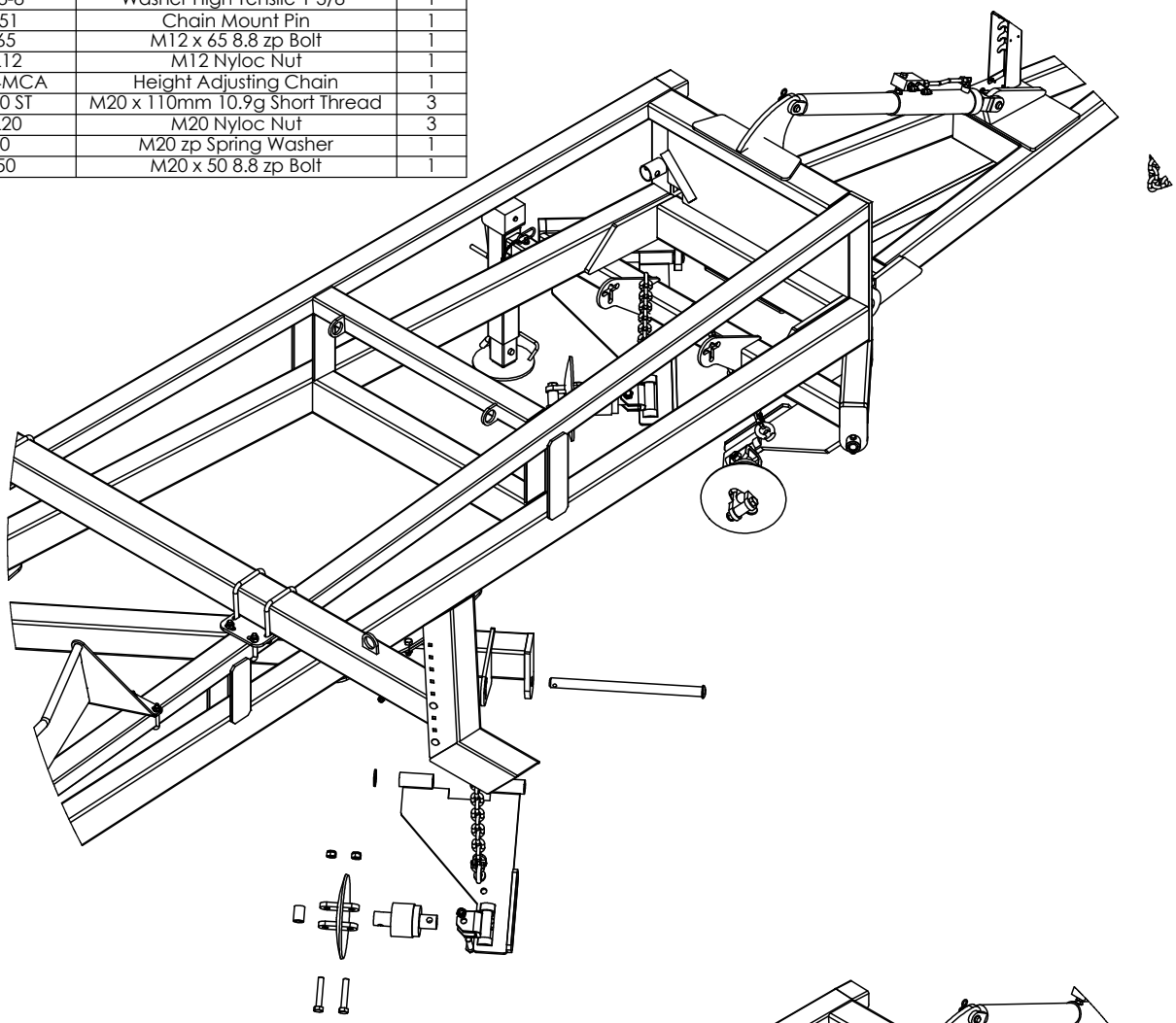

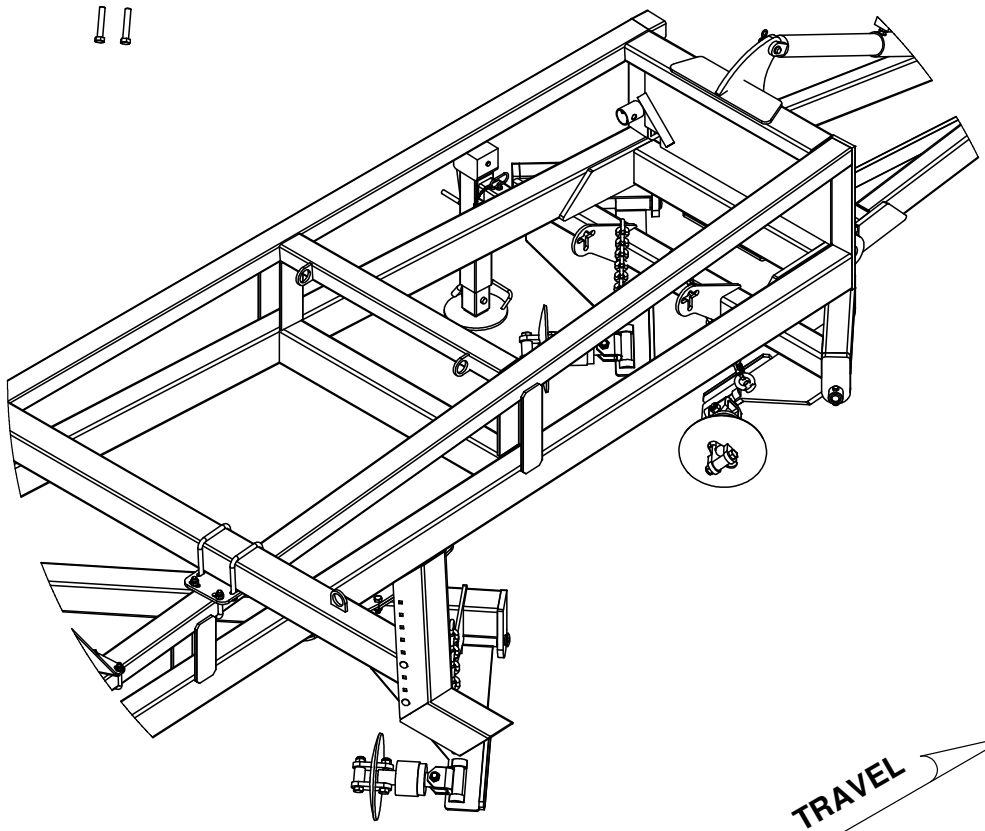

PART NUMBER	DESCRIPTION	QTY.
0802-DCTP-20	Disc Chain Tie Plate Link 20mm	1
0802-PCHB55	20mm Bolt Swivel Unit	1
0801-PCDCS55	Disc Chain Spacer	1
0232-HT13-8	Washer High Tensile 1 3/8"	1
0801-10-51	Chain Mount Pin	1
0801-PCH24MCA	Height Adjusting Chain	1
0810-33	Reducing Chain Mount Arm 20mm Clevis	1
0211-1265	M12 x 65 8.8 zp Bolt	1
0221-NYL12	M12 Nyloc Nut	1
0211-20110 ST	M20 x 110mm 10.9g Short Thread	3
0221-NYL20	M20 Nyloc Nut	3
0231-S20	M20 zp Spring Washer	1
0211-2050	M20 x 50 8.8 zp Bolt	1

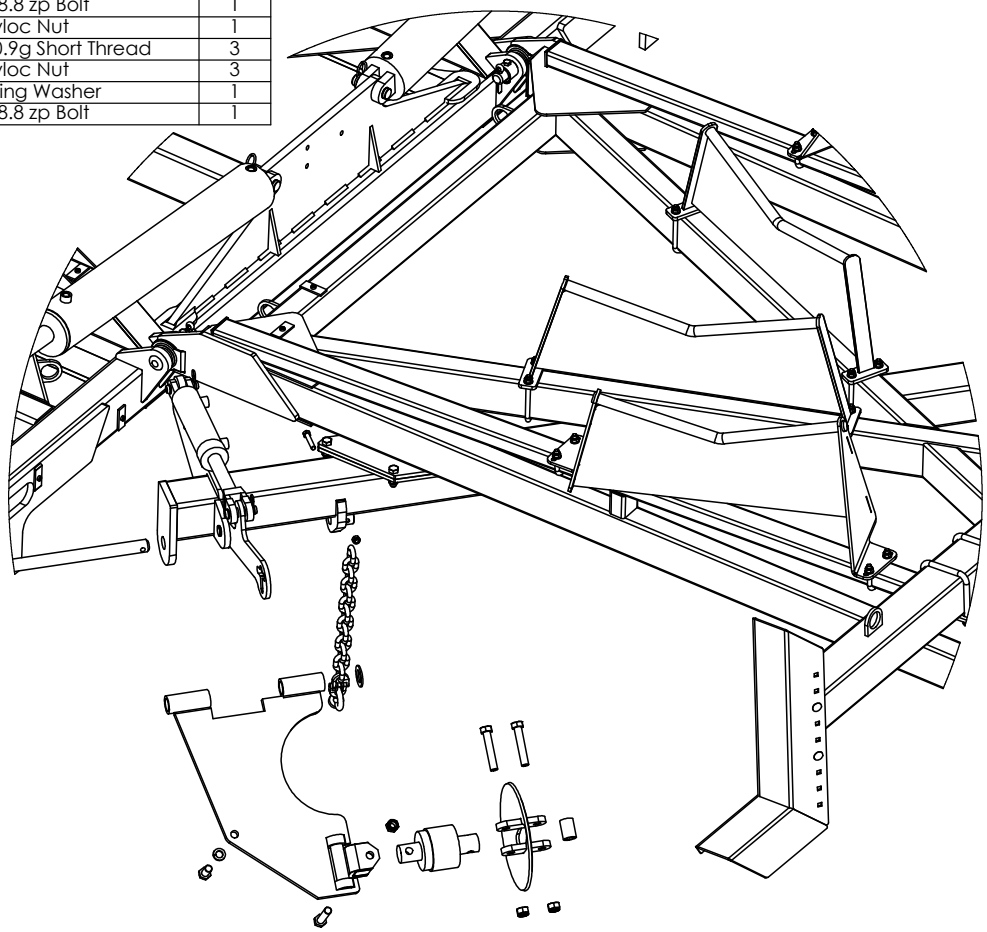

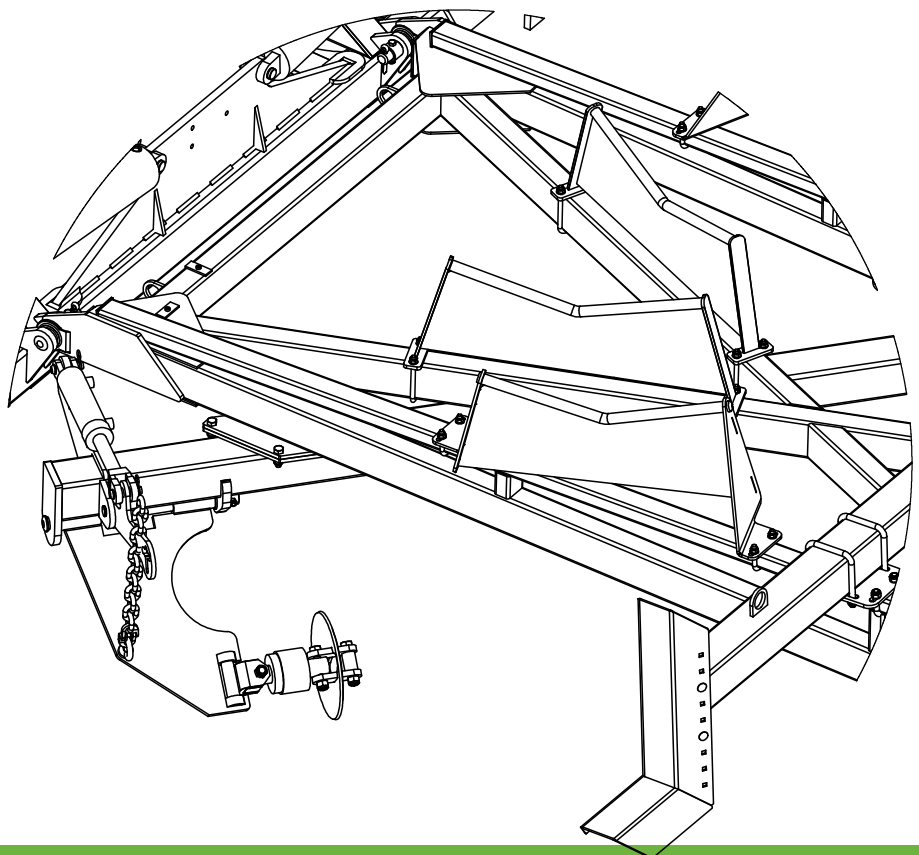

PART NUMBER	DESCRIPTION	QTY.
0802-DCTP-20	Disc Chain Tie Plate Link 20mm	2
0802-PCHB55	20mm Bolt Swivel Unit	2
0801-PCDCS55	Disc Chain Spacer	2
0810-20	Chain Mount Arm	2
0232-HT13-8	Washer High Tensile 1 3/8"	2
0801-10-51	Chain Mount Pin	2
0801-PCH24MCA	Height Adjusting Chain	2
0221-NYL12	M12 Nyloc Nut	2
0211-1265	M12 x 65 8.8 zp Bolt	2
0211-20110 ST	M20 x 110mm 10.9g Short Thread	6
0231-S20	M20 zp Spring Washer	2
0211-2050	M20 x 50 8.8 zp Bolt	2
0221-NYL20	M20 Nyloc Nut	6

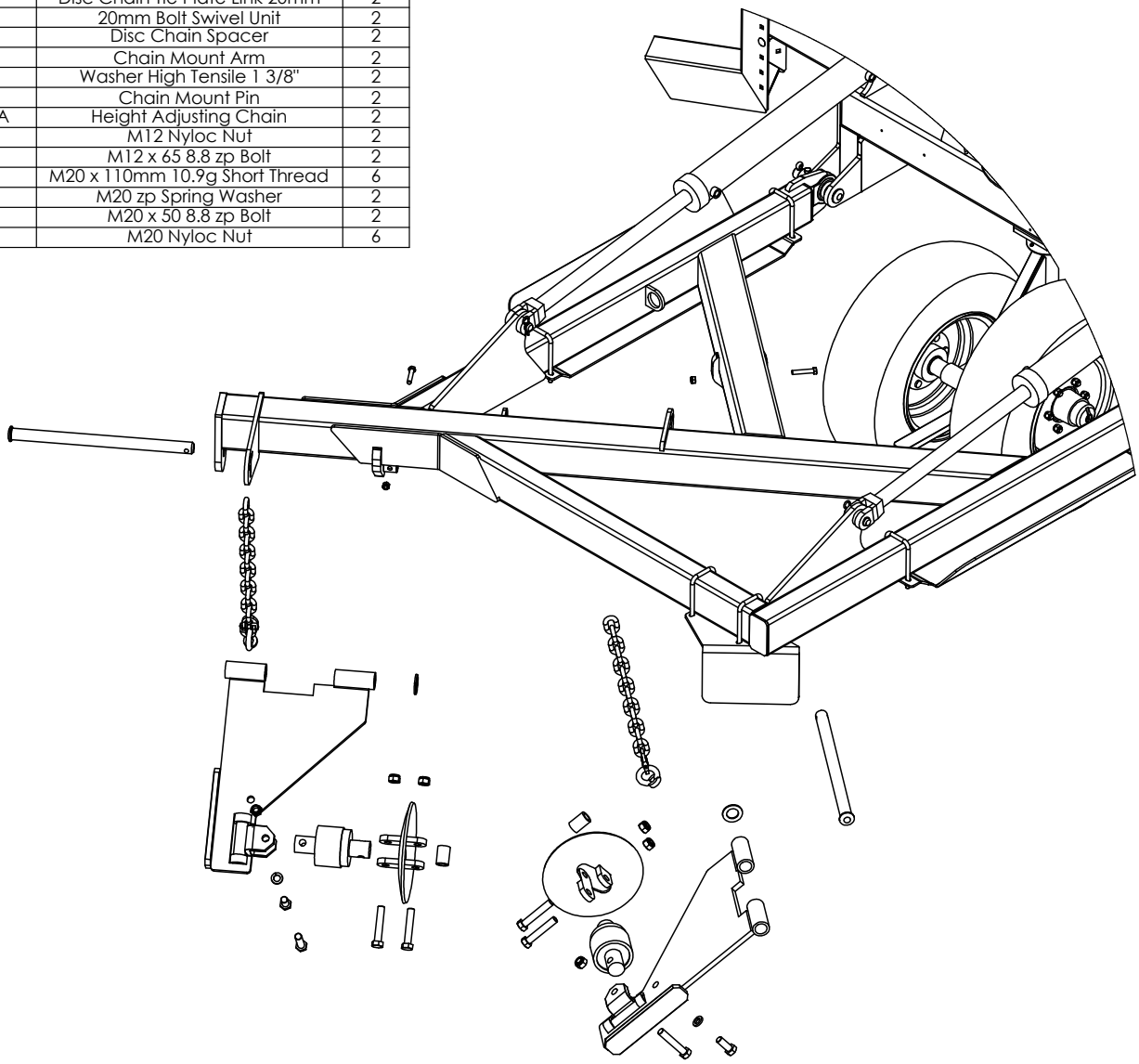

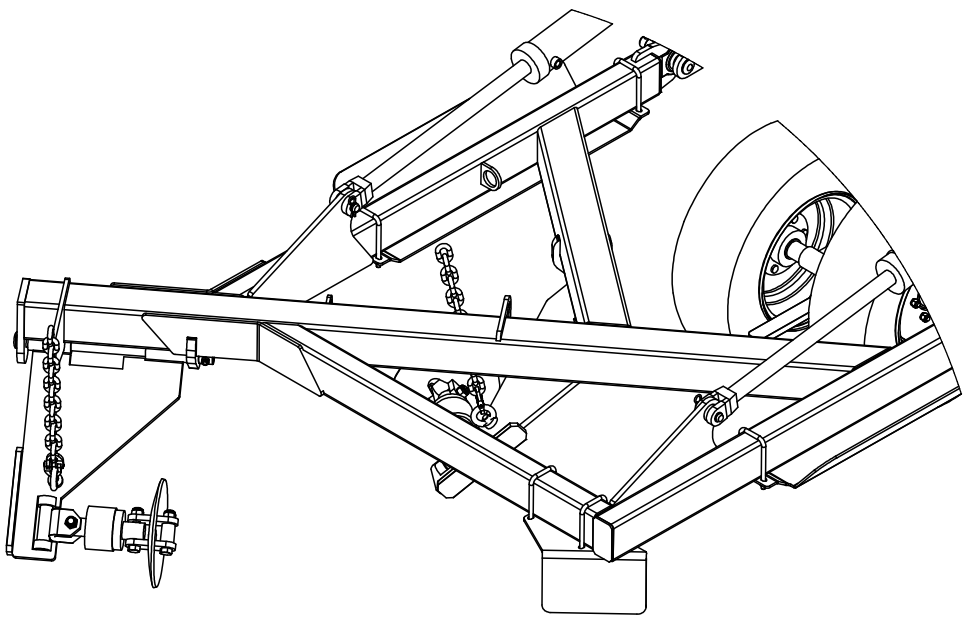

TRAVEL

PART NUMBER	DESCRIPTION	QTY.
0113-MB 3550DX	35 ID x 50mm DX Bush	2
0801-KE-0307-1	Clevis Pin 25mm x 75mm	1
0802-DCTP-20	Disc Chain Tie Plate Link 20mm	1
0802-PCHB55	20mm Bolt Swivel Unit	1
0801-PCDCS55	Disc Chain Spacer	1
0801-XK9261S	20mm Compression Spring	1
0801-PCHTA-SB	Steel Spring Retaining Bush	1
0801-PCHTA-N6	6tpi Lock Nut	2
0232-HT13-8	Washer High Tensile 1 3/8"	1
0801-10-51	Chain Mount Pin	1
0810-103F	Front Module Tension Body	1
0810-104-40-45	40/45' Module Tension Arm	1
0810-105	Module Tension Linkage	1
0801-PCH24MCA	Height Adjusting Chain	1
0801-10-S2L	Rigid Spring Locator	1
0261-PINC550	Cotter Pin M5 x 50	1
0801-10-110	Module Pivot Arm Bush	1
0211-1265	M12 x 65 8.8 zp Bolt	1
0221-NYL12	M12 Nyloc Nut	1
0211-20150	M20 x 150 8.8 zp Bolt	1
0211-20110 ST	M20 x 110mm 10.9g Short Thread	3
0221-NYL20	M20 Nyloc Nut	4

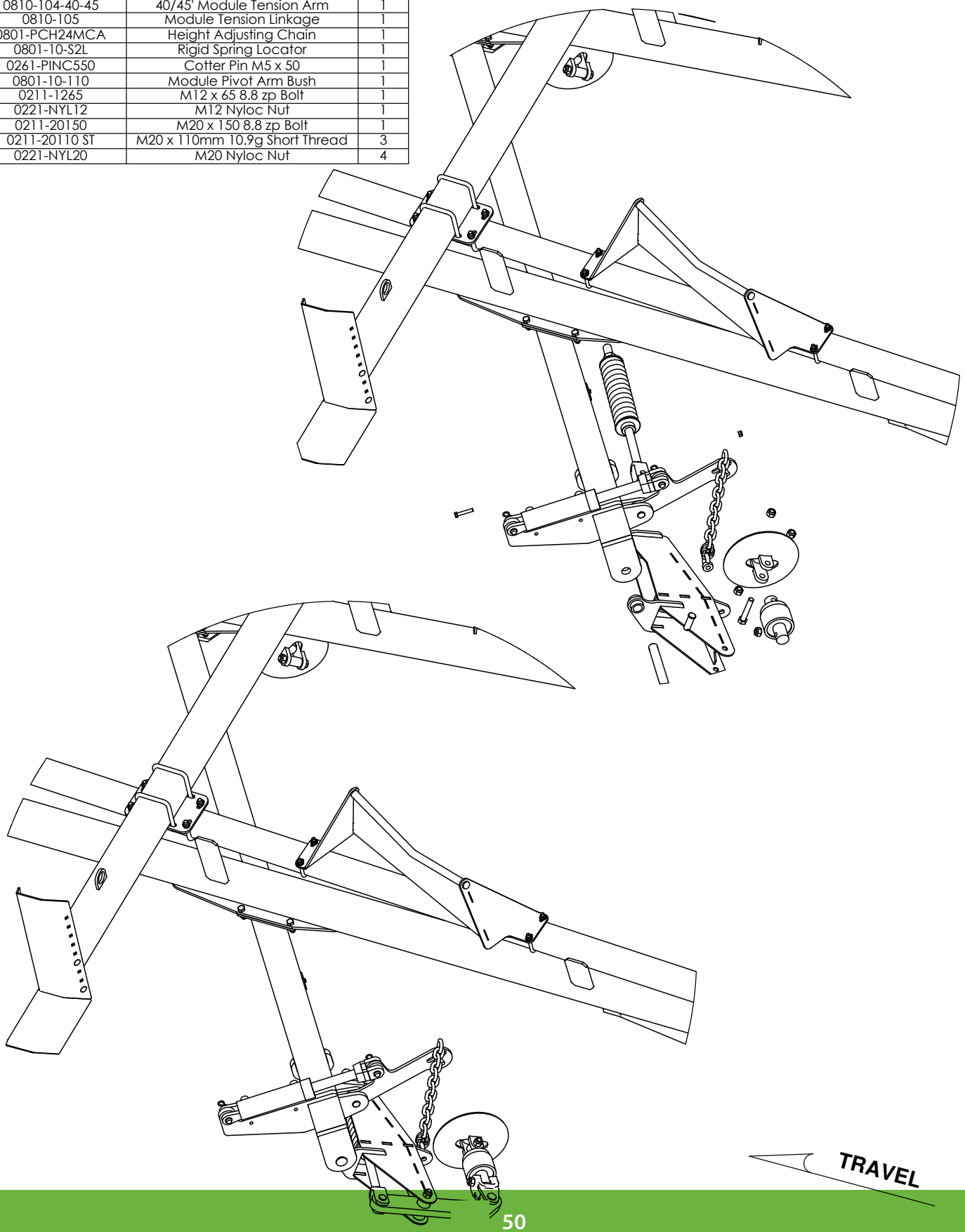

PART NUMBER	DESCRIPTION	QTY.
0113-MB 3550DX	35 ID x 50mm DX Bush	2
0801-KE-0307-1	Clevis Pin 25mm x 75mm	1
0802-DCTP-20	Disc Chain Tie Plate Link 20mm	1
0802-PCHB55	20mm Bolt Swivel Unit	1
0801-PCDCS55	Disc Chain Spacer	1
0801-XK9261S	20mm Compression Spring	1
0801-PCHTA-SB	Steel Spring Retaining Bush	1
0801-PCHTA-N6	6tpi Lock Nut	2
0232-HT13-8	Washer High Tensile 1 3/8"	1
0801-10-51	Chain Mount Pin	1
0810-104-40-45	40/45' Module Tension Arm	1
0810-105	Module Tension Linkage	1
0801-PCH24MCA	Height Adjusting Chain	2
0801-10-S2L	Rigid Spring Locator	1
0801-10-110	Module Pivot Arm Bush	1
0211-2050	M20 x 50 8.8 zp Bolt	1
0261-PINC550	Cotter Pin M5 x 50	1
0211-1265	M12 x 65 8.8 zp Bolt	1
0221-NYL12	M12 Nyloc Nut	1
0211-20110 ST	M20 x 110mm 10.9g Short Thread	3
0221-NYL20	M20 Nyloc Nut	4
0211-20150	M20 x 150 8.8 zp Bolt	1
0810-103R	Rear Module Tension Body	1

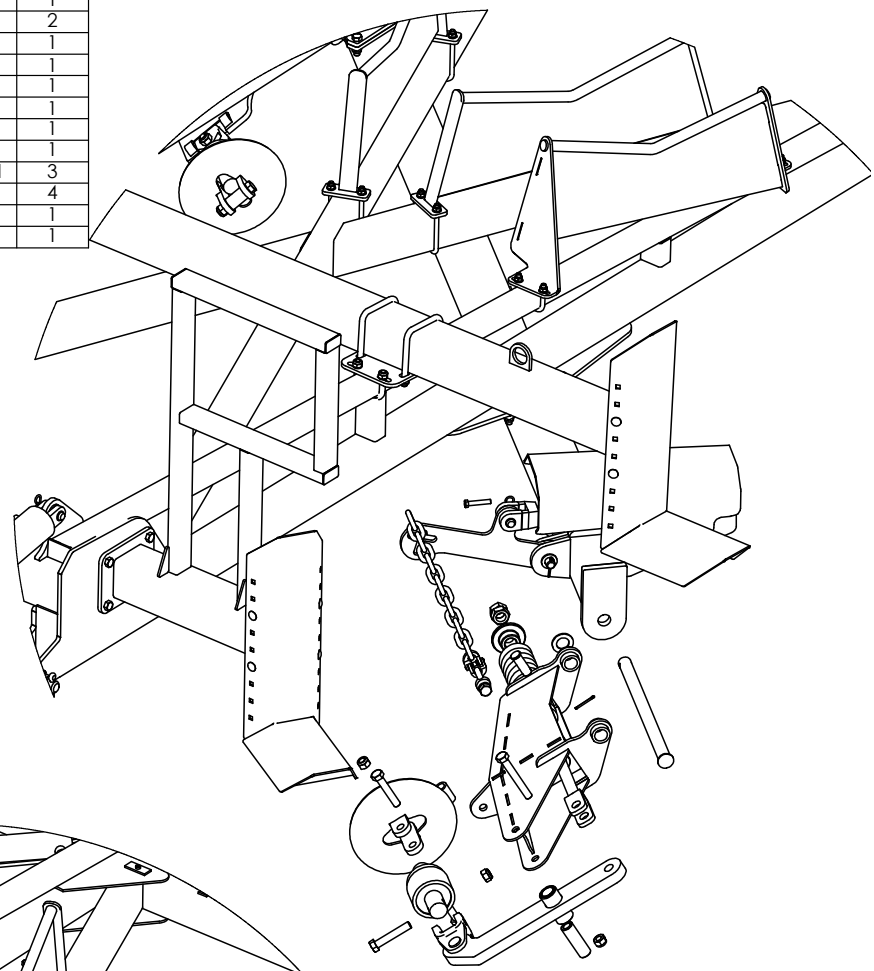

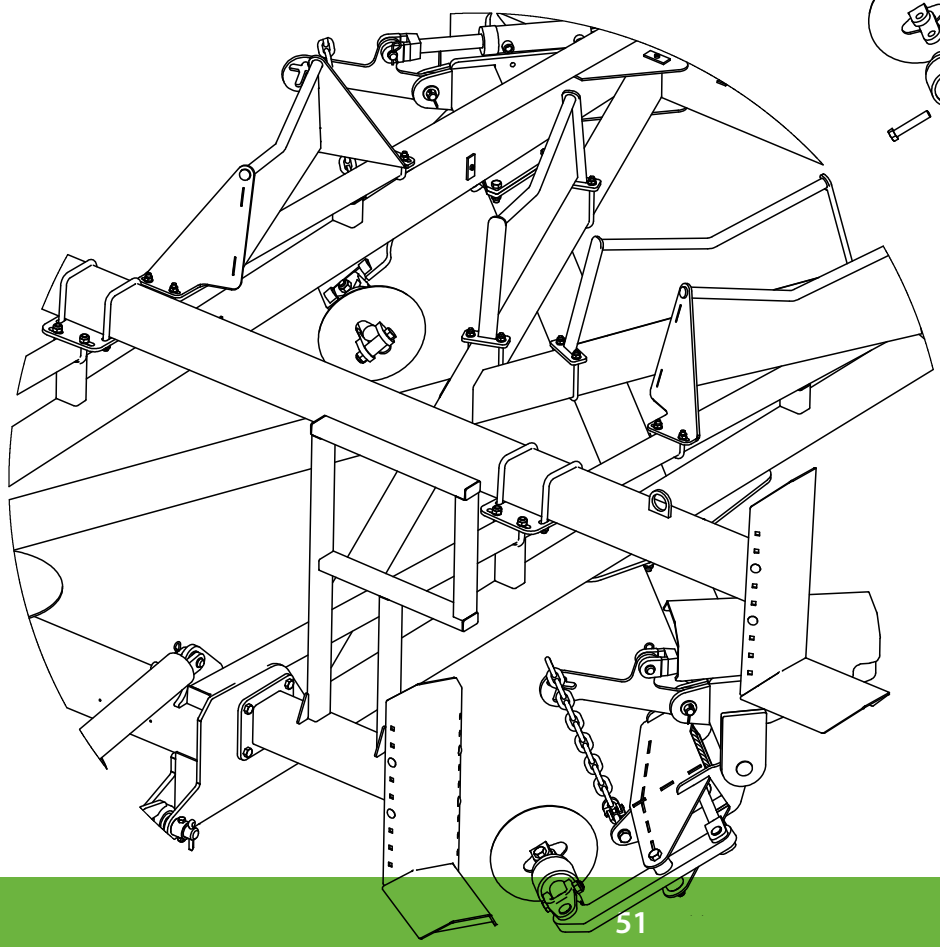

Section 3
Diagrams and charts

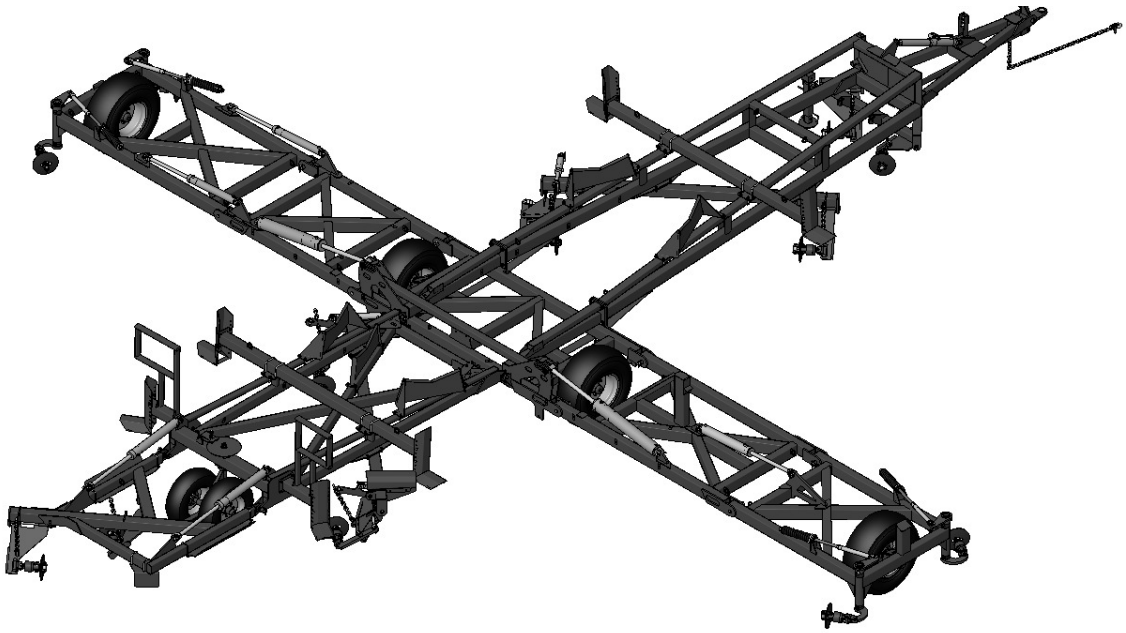

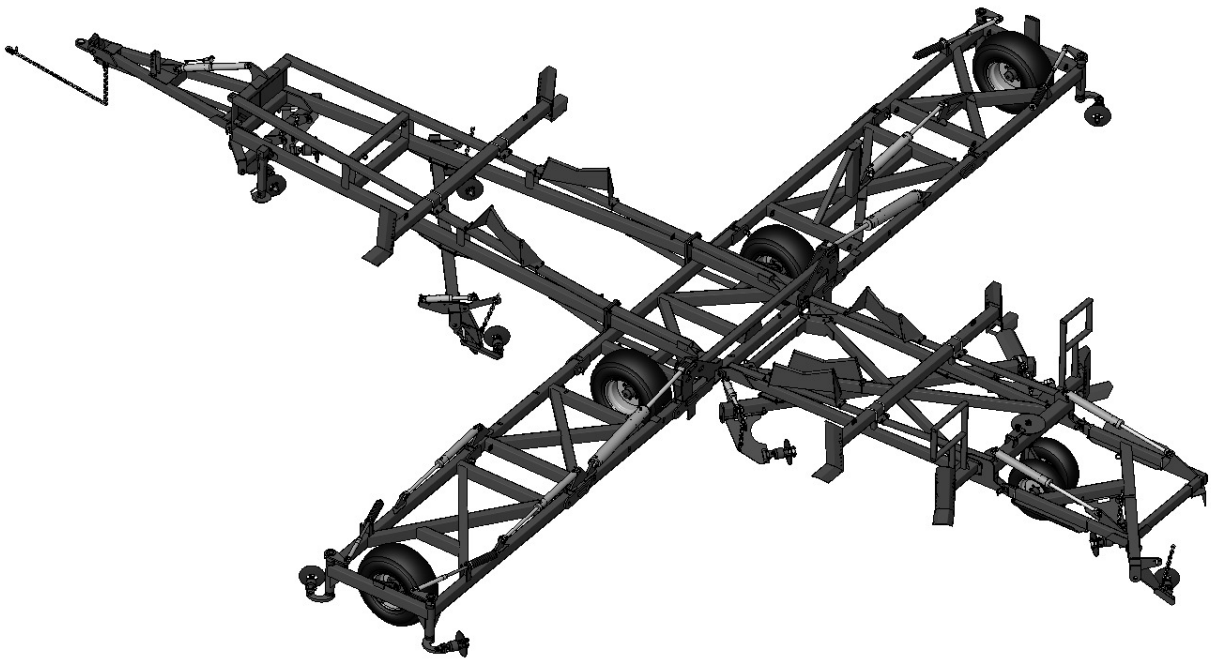

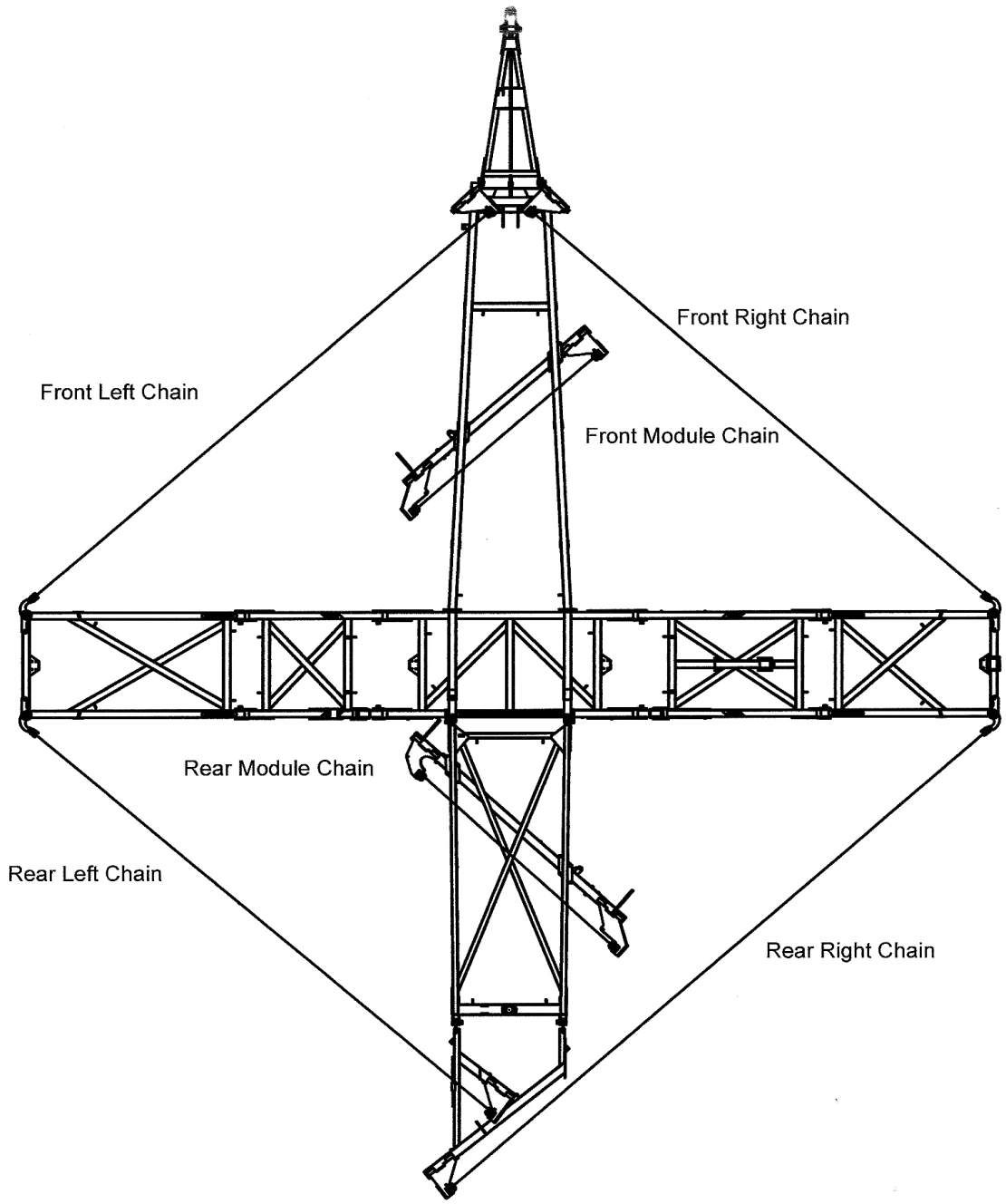
Front Right Chain
Front Left Chain
Front Module Chain
Rear Module Chain
Rear Left Chain
Rear Right Chain

Kelly Diamond Harrow 40

Kelly Diamond Harrow 40

SIZE

Before folding the machine for the first time, ensure all hydraulic cylinders are charged with oil.

To do this, run the hydraulics through the unfold sequence until the outer wings are straight and the centre cylinders are centred in the slots. (It may take a few minutes for the cylinders to charge completely).

Failure to do this could result in severe personal injury and/or damage to the machine.

Cylinders NOT charged

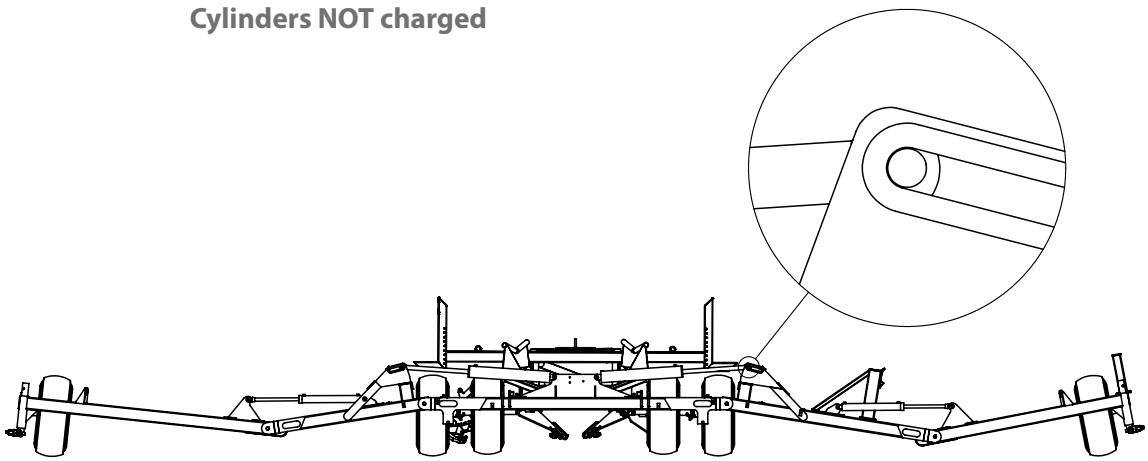

Cylinders charged

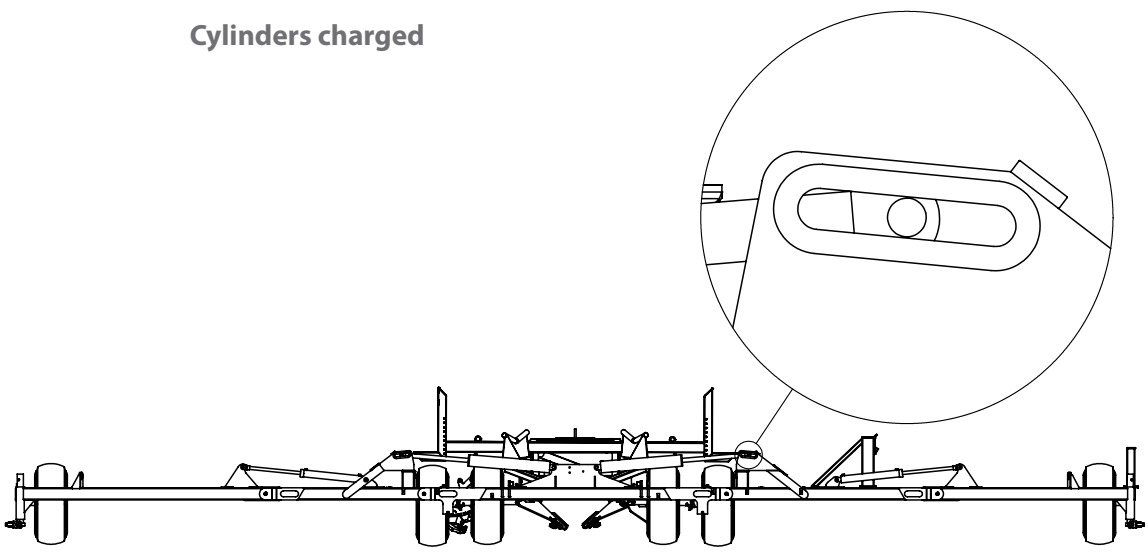

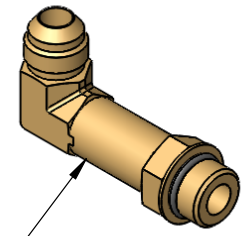

0323-S12-1212

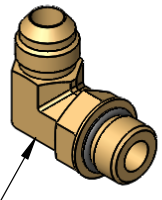

0323-S91-1212

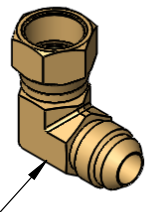

0323-S15-1212

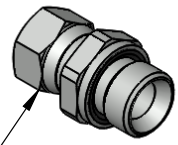

0323-S71-0812

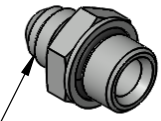

0323-S74-0812

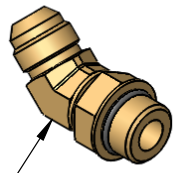

0323-S88-1212

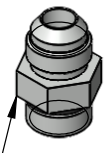

0323-S90

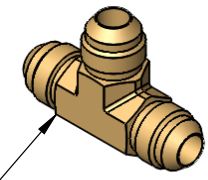

0324-S19-121212

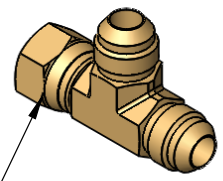

0324-S67-121212

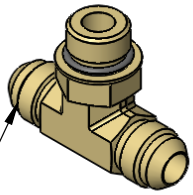

0324-S92-121212

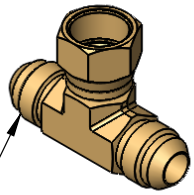

0324-S68-121212

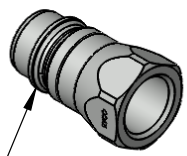

0325-R91-08M

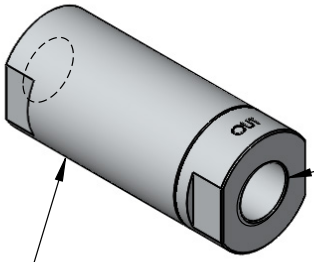

Note: Fit this end to valve block

0343-924001261

Hydraulic layout

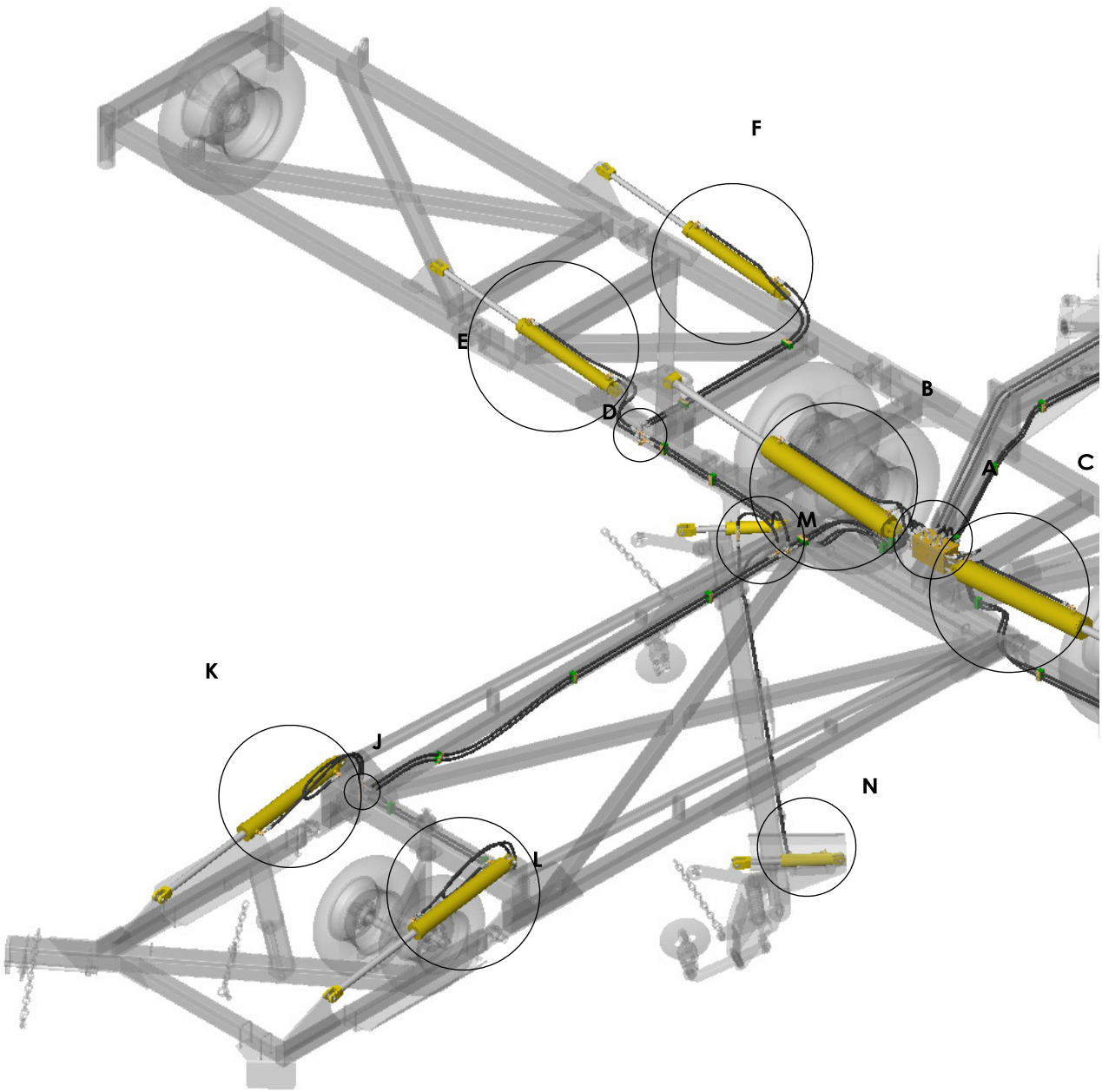

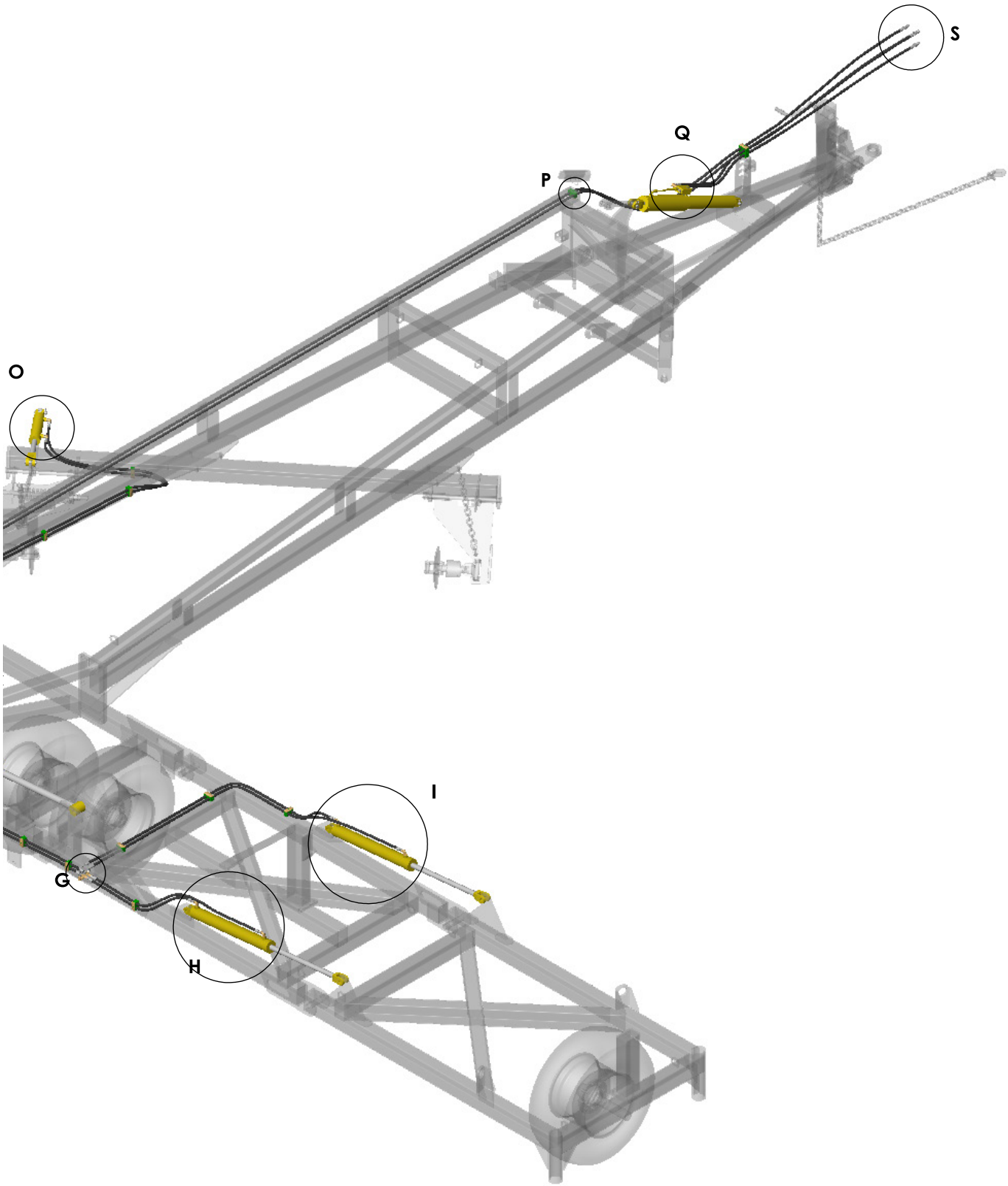
S
Q
P
O
I
G
H

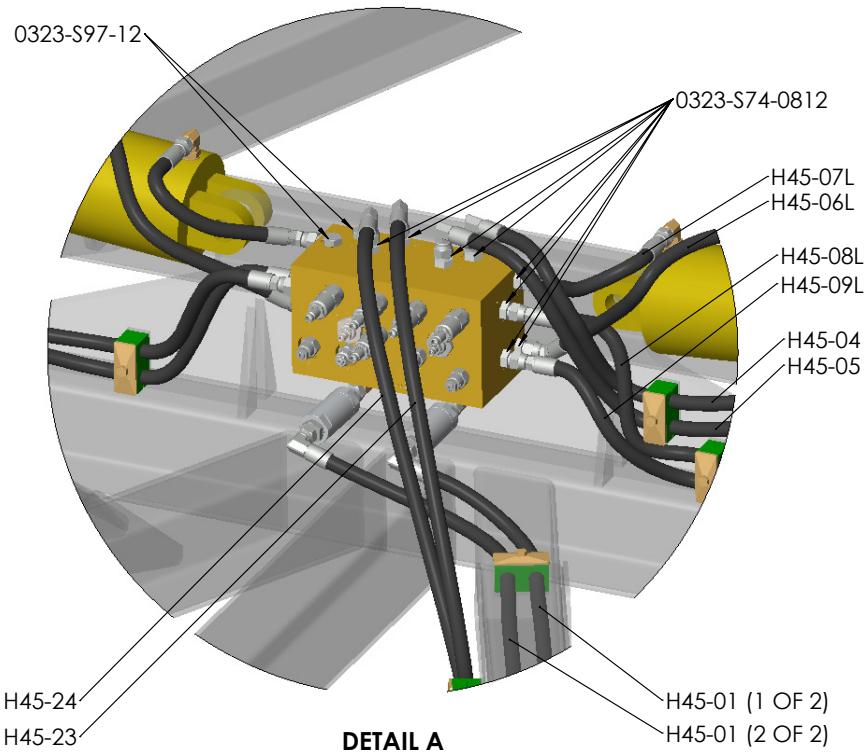

DETAIL A
Reverse View A

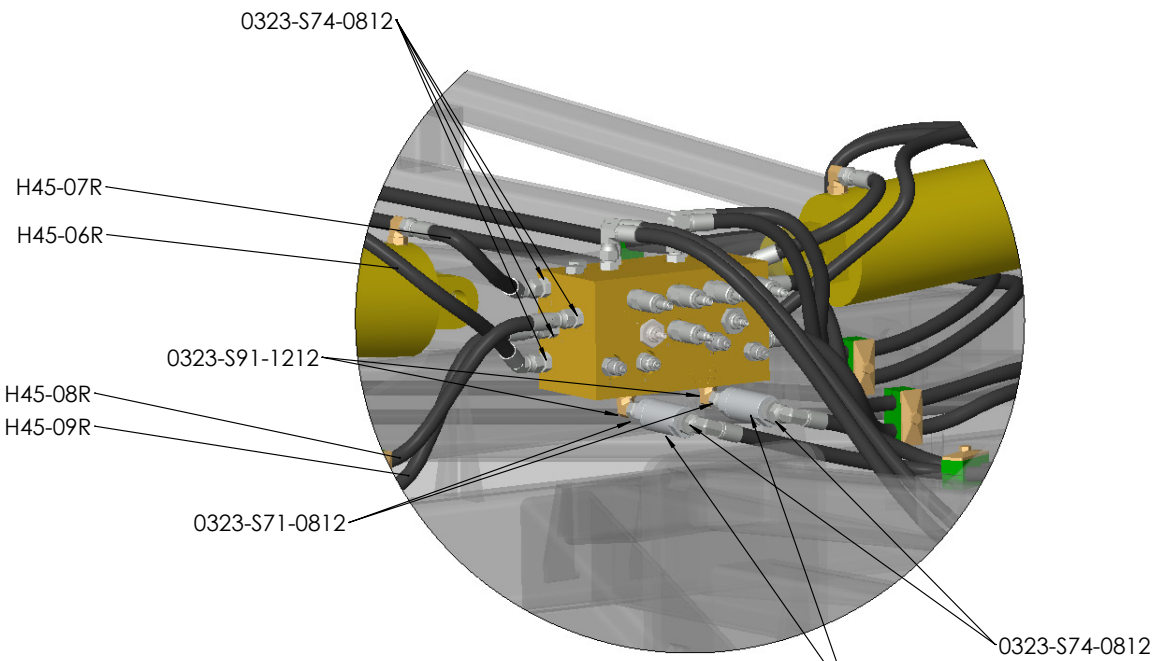

DETAIL A
Reverse View B

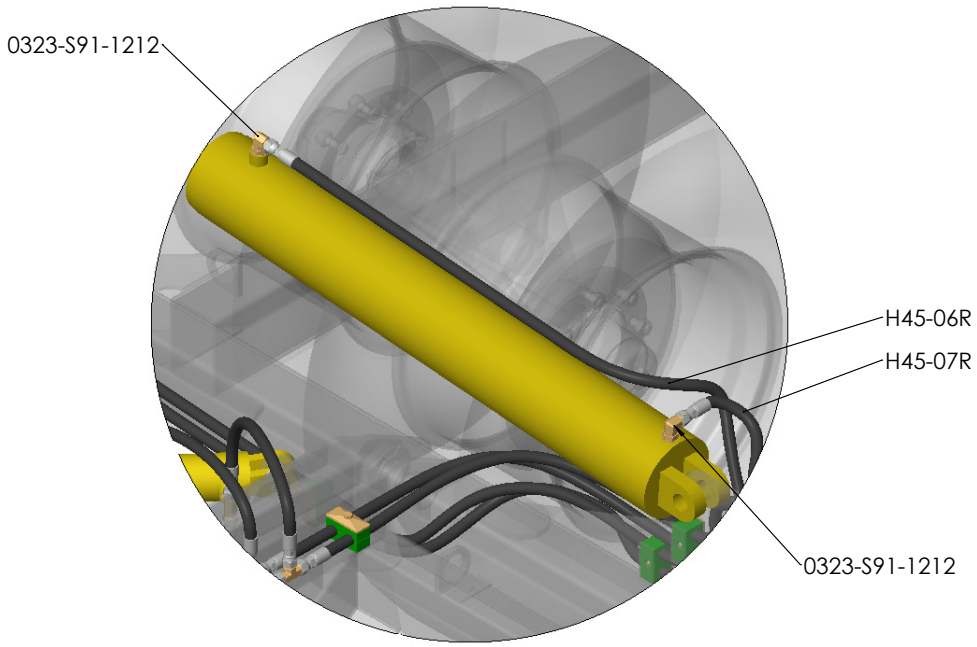

DETAIL B

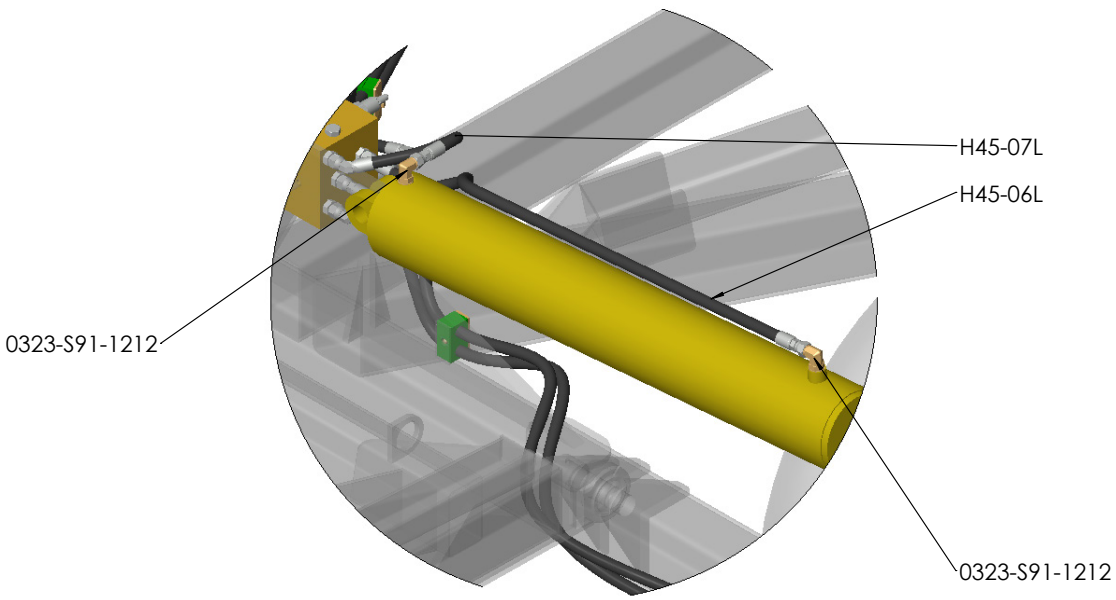

DETAIL C

Hydraulic detail

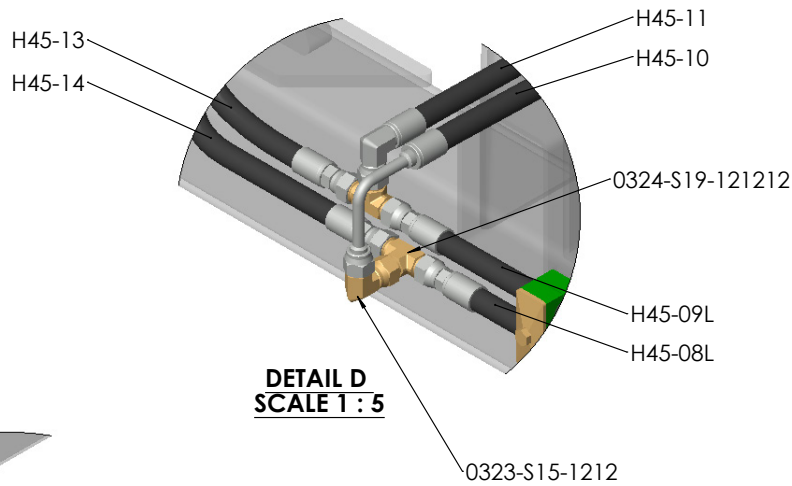

DETAIL D
SCALE 1 : 5

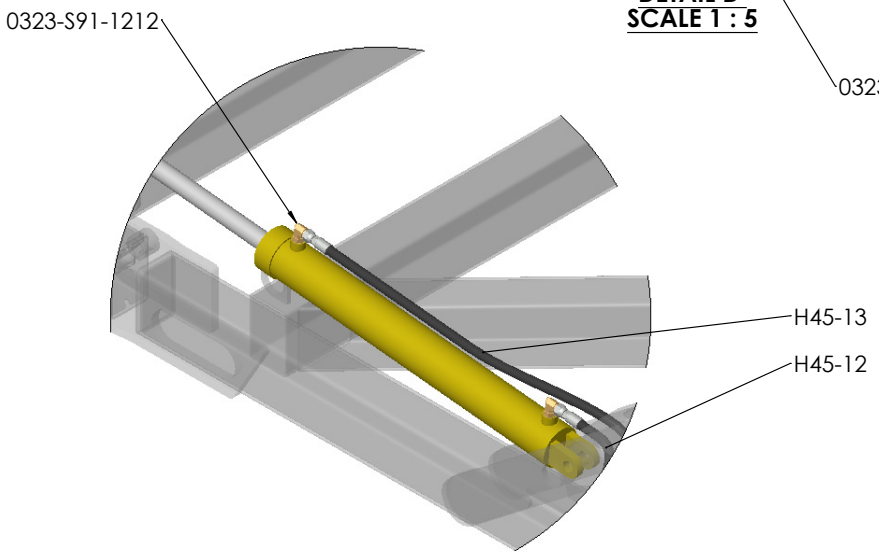

DETAIL E

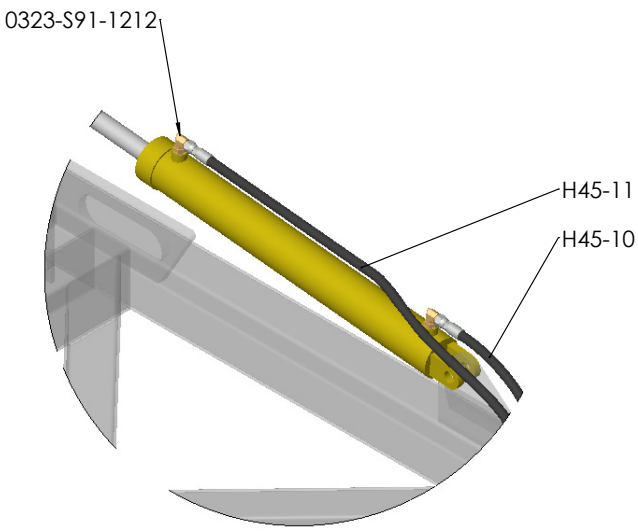

DETAIL F

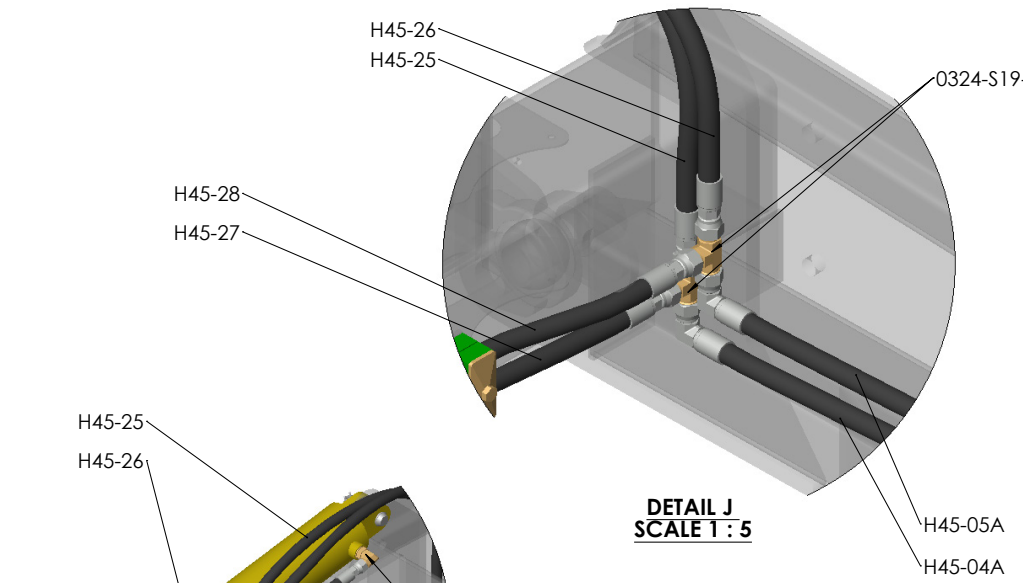

DETAIL J
SCALE 1 : 5

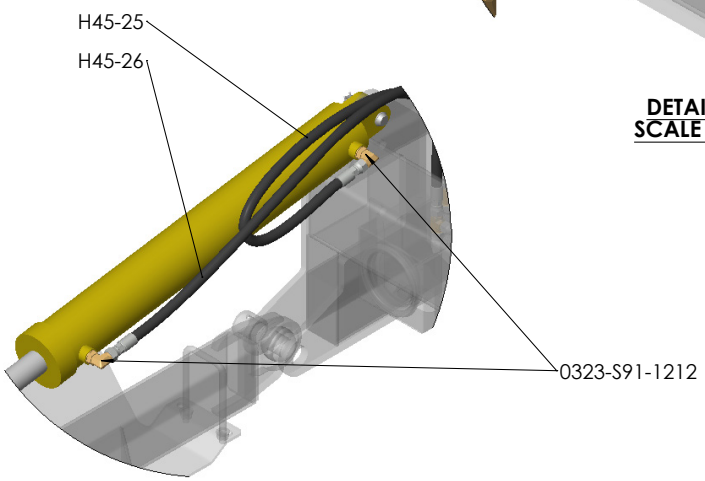

DETAIL K

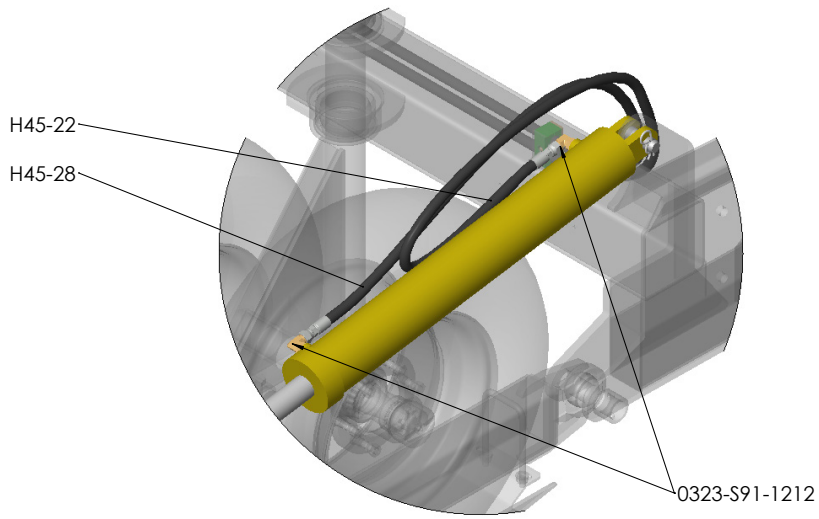

DETAIL L

Hydraulic detail

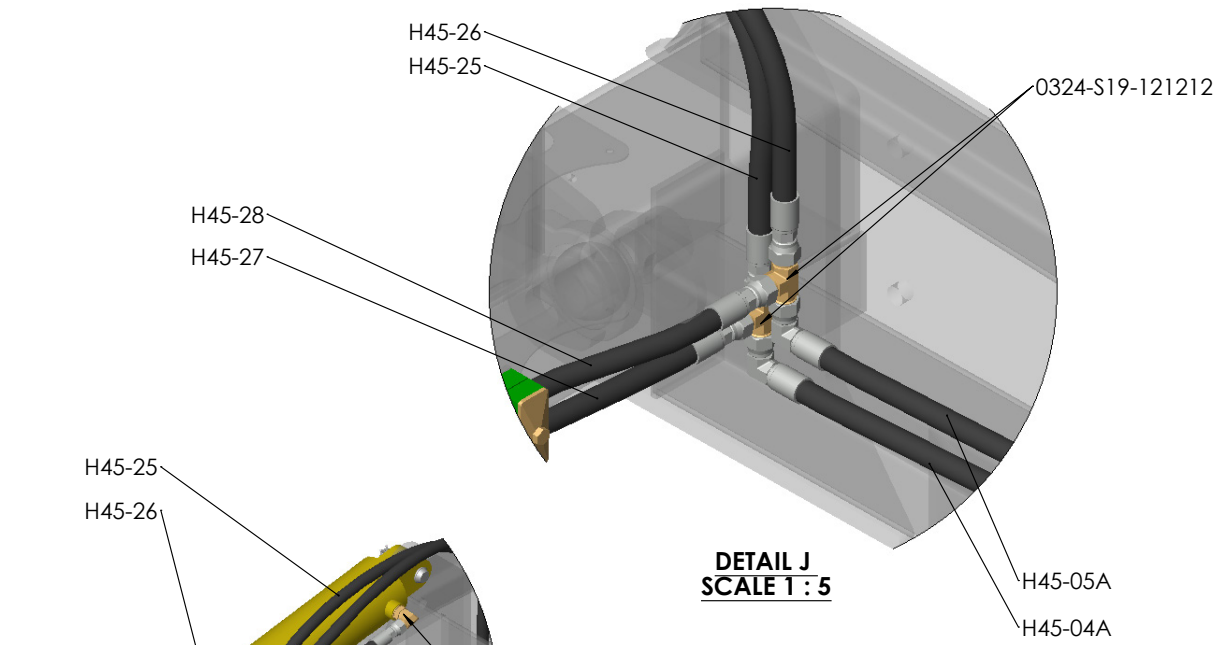

DETAIL J
SCALE 1 : 5

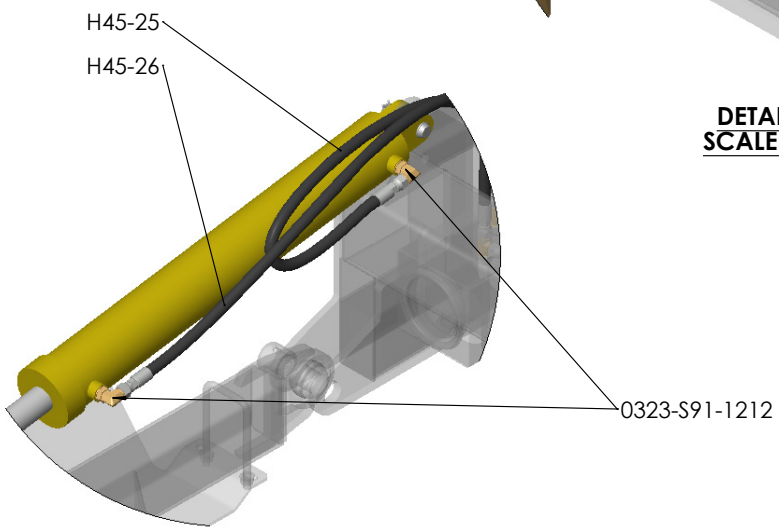

DETAIL K

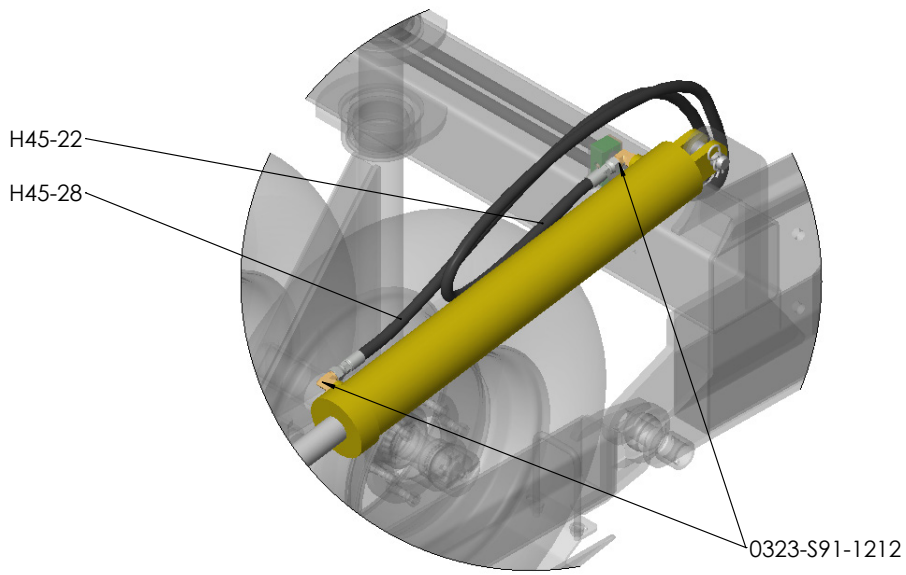

DETAIL L

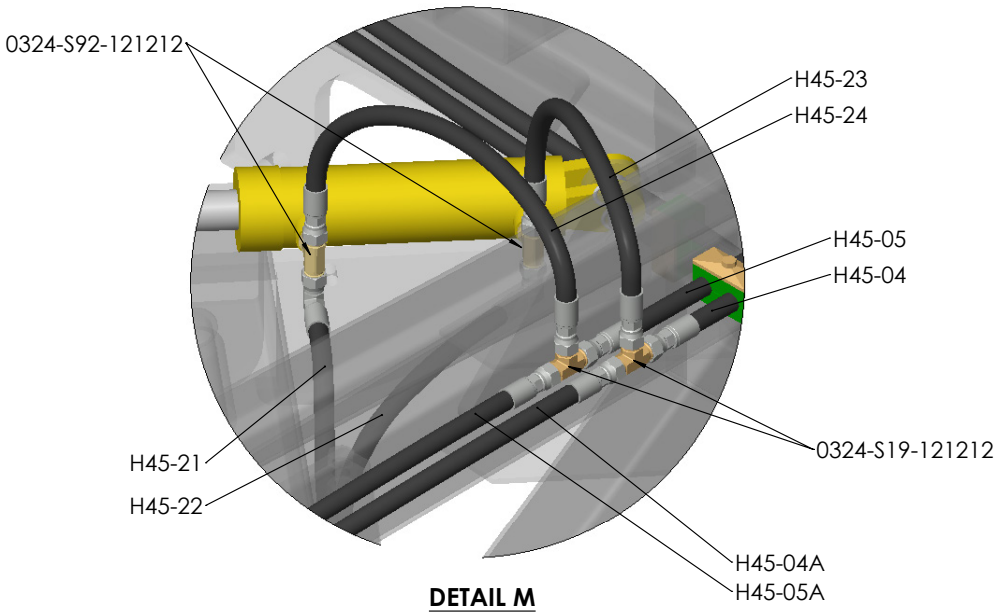

DETAIL M

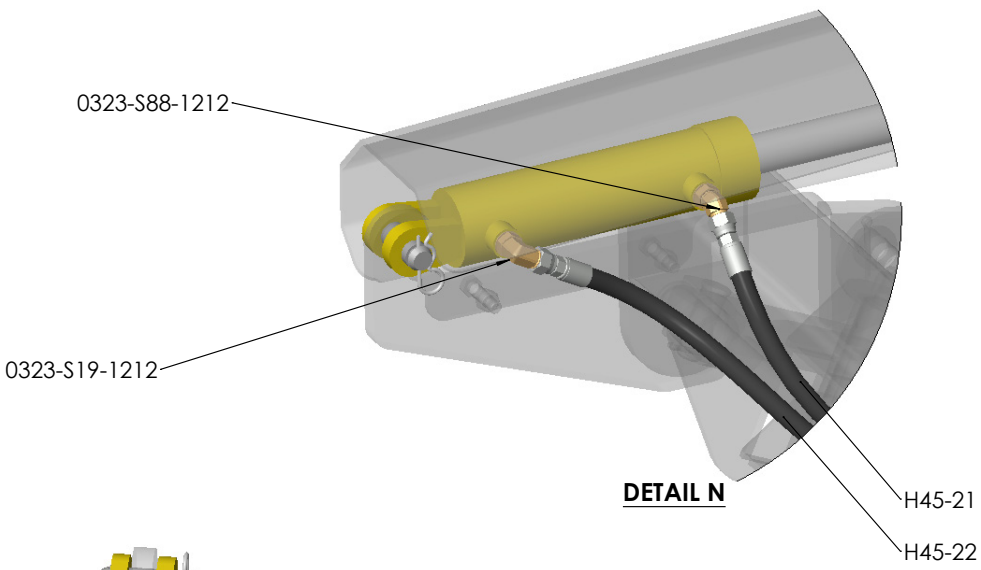

DETAIL N

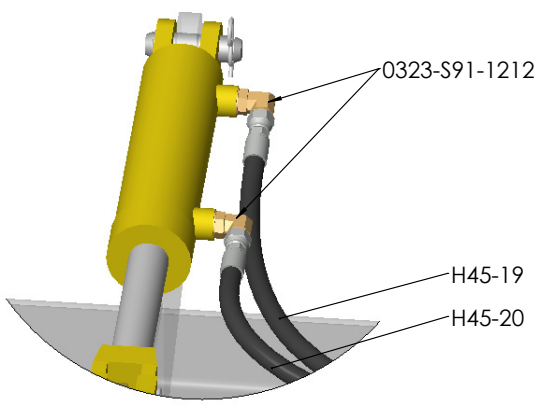

DETAIL O

Hydraulic detail

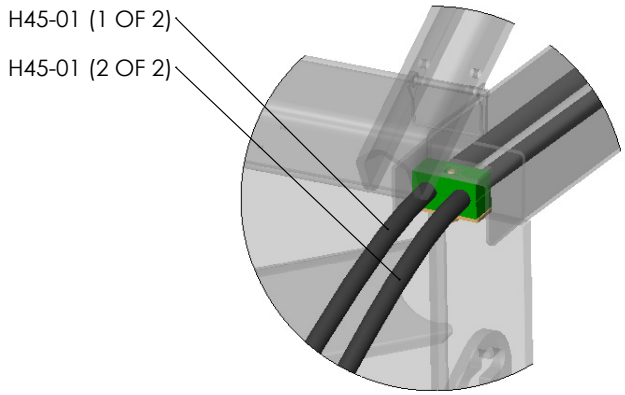

DETAIL P

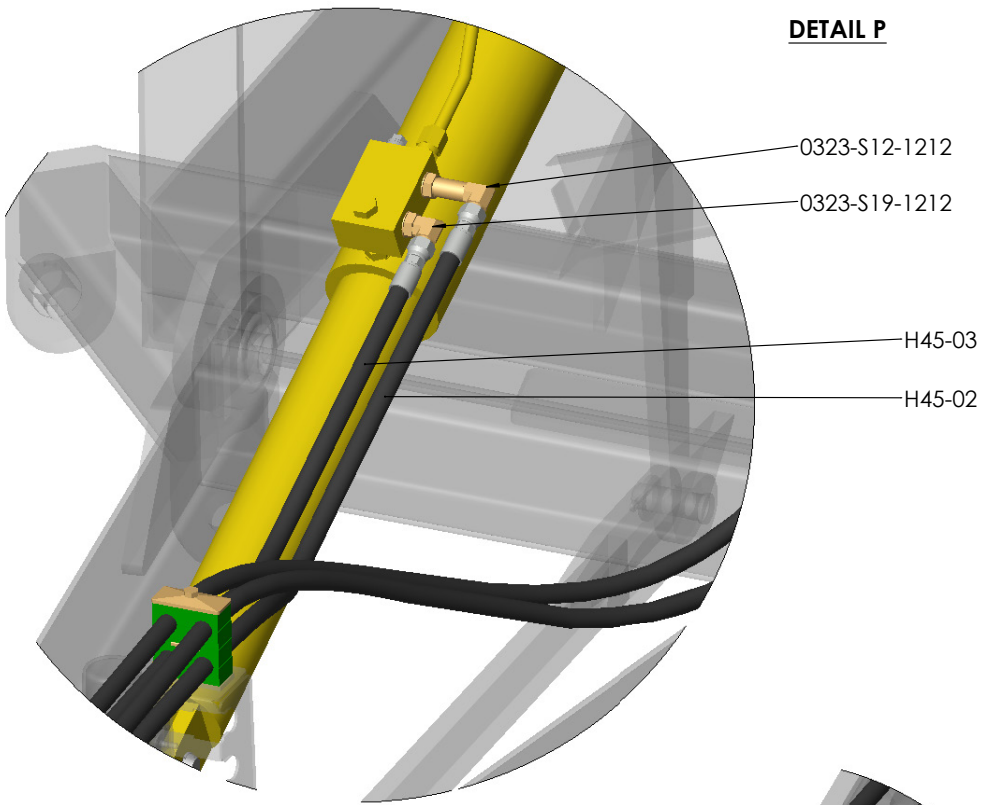

DETAIL Q

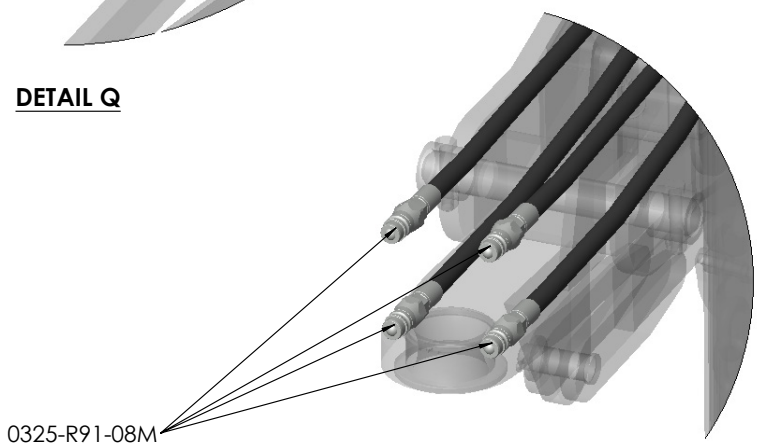

DETAIL S

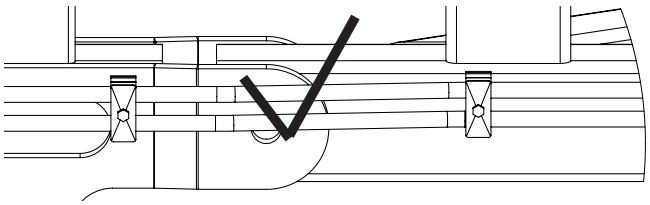

Correct layout of hoses

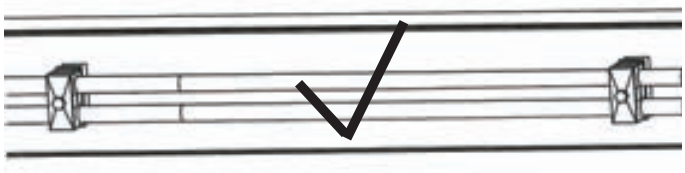

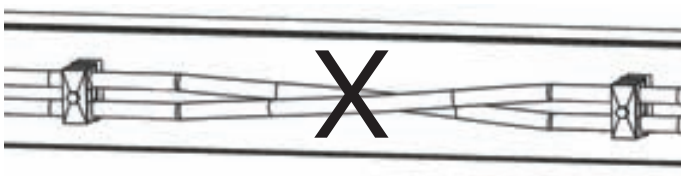

Avoid crossovers

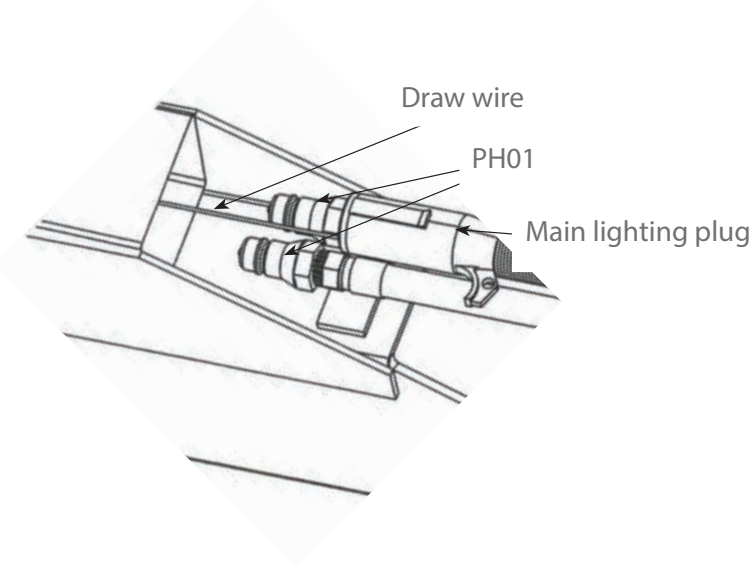

Wiring diagram

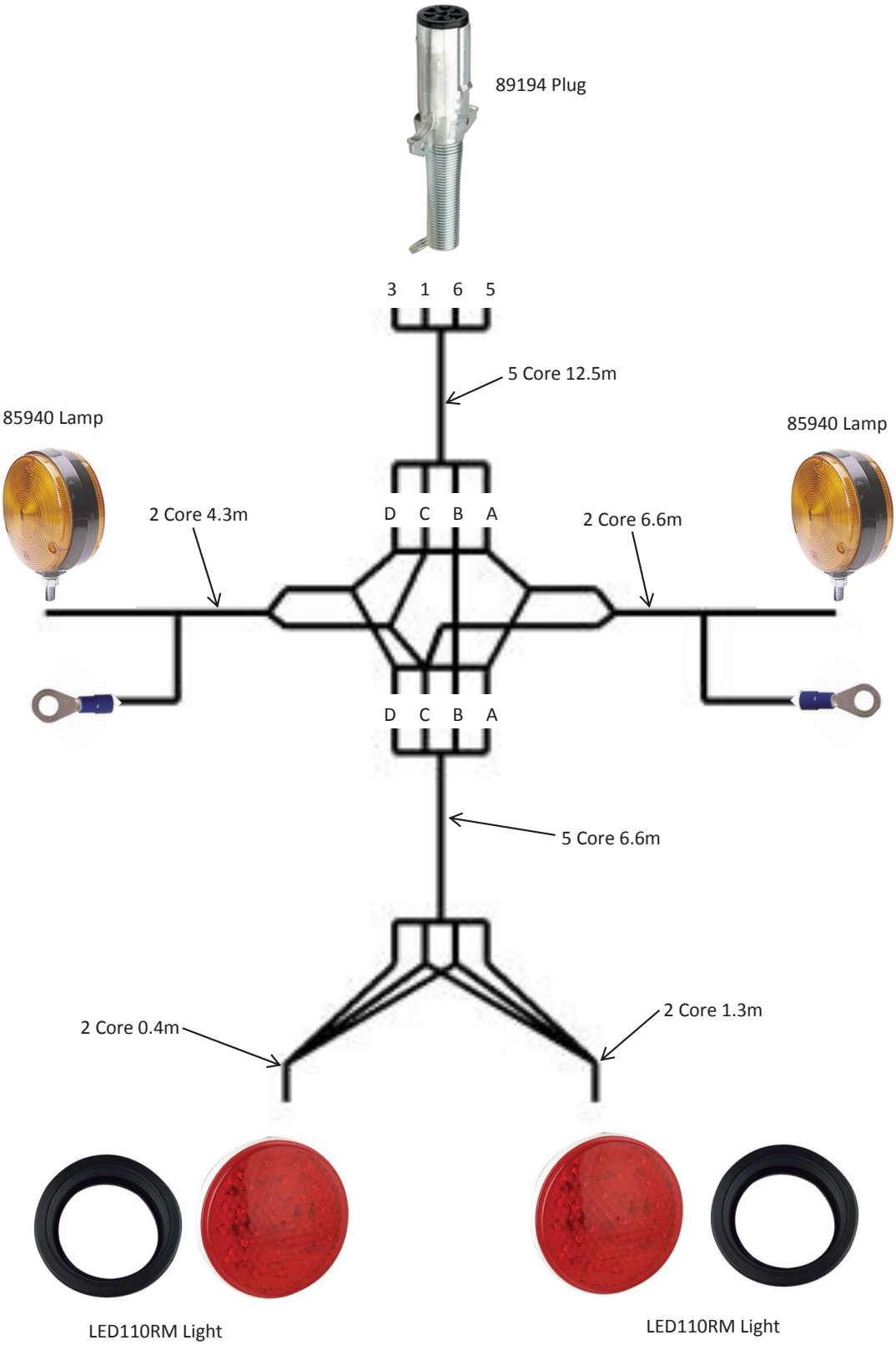

Mounting swivels

Fixed housing end of swivel should always face forward

Rotating seal end of swivel should always face rearward

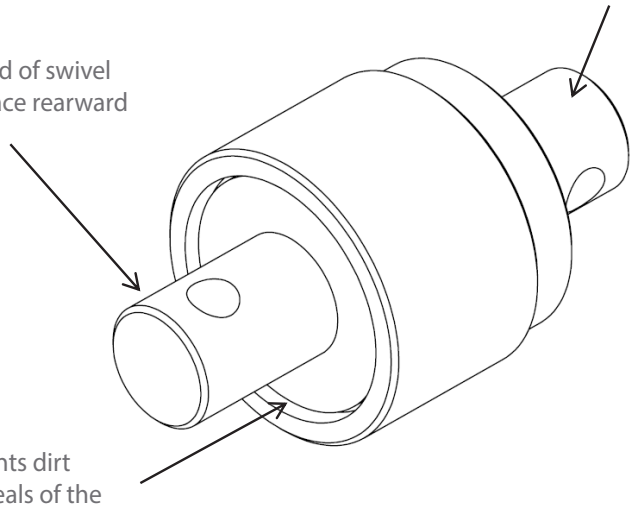

Mounting like this prevents dirt getting forced into the seals of the swivel increasing longevity of the swivel

For example

Swivels attached to the leading ends of the chains should have the rotating seal end attached to the chain, as shown

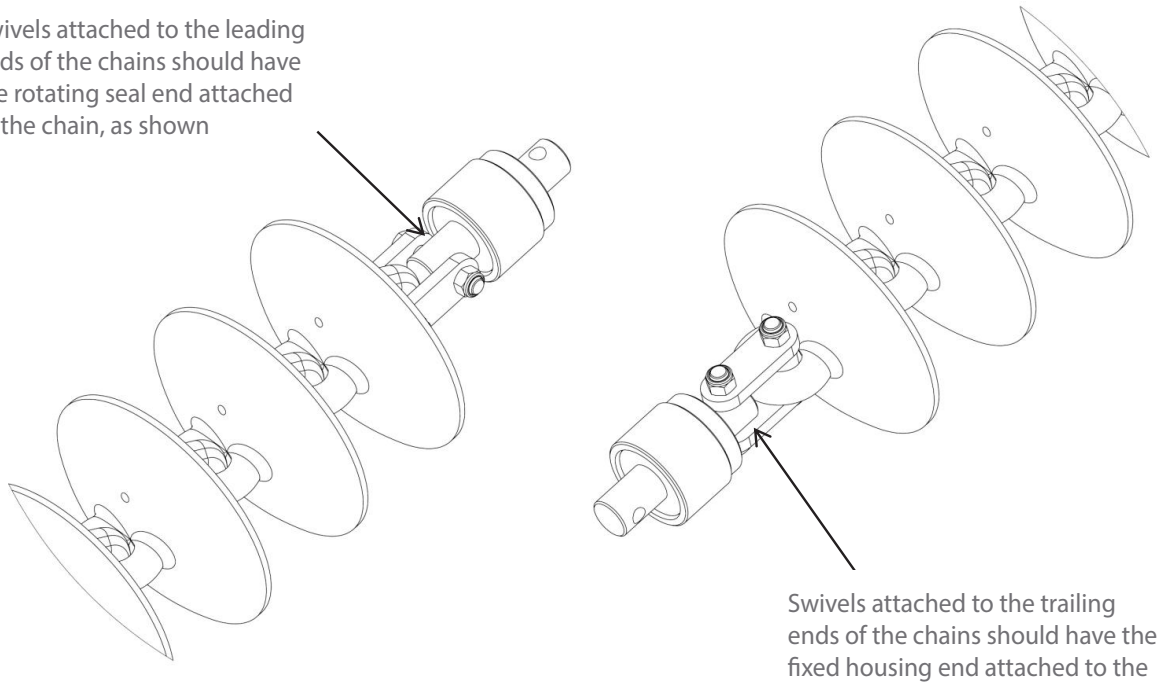

Swivels attached to the trailing ends of the chains should have the fixed housing end attached to the chain, as shown

Fitting cast link retaining pins

Please install cast link retaining Pins (3/8" x 3" Roll Pin, part number 0262-3-8X3) on all cast disc links.
Failure to do this could lead to the discs becoming dislodged during transport causing severe damage or injury.

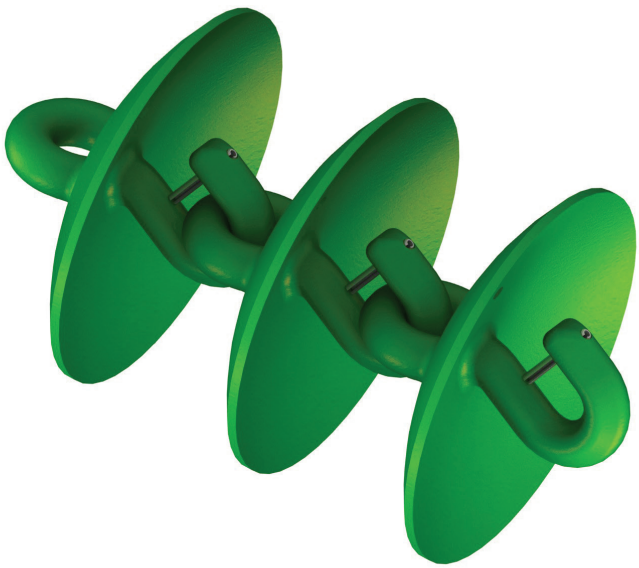

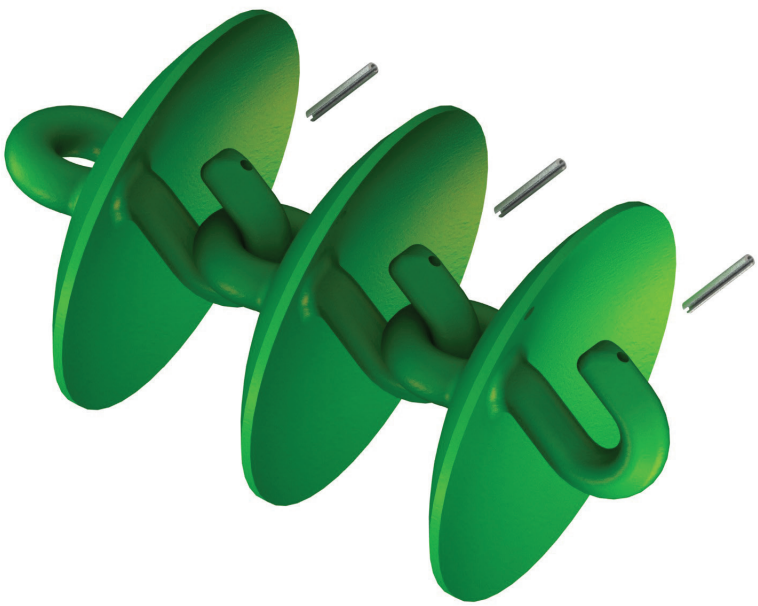

Operating speeds

Operating speeds for normal conditions	
Chain type	**Speed**
Prickle Chain	6-10 Mph / 10-16 kmph
Disc Mulch Chain	6-8 Mph / 10-12 kmph
Transport / towing on roads	15 Mph / 25 kmph

Tire pressure

Tire size	Ply	PSI	KPA
16.5L x 16.1	14	36	250
H40 x 14.5-19	26	60	410
11L - 15	10	44	300
15.5/80/24	16	58	400
16.5/85/24	16	55	380
550/60/22.5	16	40	280
400/60/22.5	16	50	350
12.5/80/18	14	85	590
15.0/70/18	14	71	490

Chain Harrow specifications

Model	45'/13.5m
Working width	43.5'/13.5m
Transport width	13.5'/4.1m
Transport height	13'/3.9m
Transport length	55'/16.7m

Bolt Torque Settings

Bolt Type	Wheel nut				U Bolt			Grade 8.8 Bolt					Grade 10.9 Bolt	
Bolt Size	M18	M20	1/2"	9/16"	M10	M12	M16	M10	M12	M16	M20	M24	M20	M24
Ft lb	255	265	90	100	22	36	55	32	48	140	190	270	300	350
Nm	345	360	125	140	30	50	75	44	65	190	260	370	406	475

[1] When fitting a wheel & tire to a hub, do the wheel nuts up in rotation to the correct tension. To achieve this choose a wheel nut & tighten, then go clockwise to the next wheel nut & tighten & so on until all wheel nuts are tight. Then repeat the procedure to check that all nuts are tight. Do not use impact tools to tighten wheel nuts. For a guide to the correct tension of the wheel nuts please use the appropriate tension for your size wheel nuts from the Bolt Torque Settings table.

Torque values are for dry threads and surfaces however it is permissible to apply a small amount of anti corrosive oil to the threads.

Disc Chain lengths

				Chain type	
Model		**Length**	**W36**	**CL1**	**R300**
45'	Front right	26.6'/8.1m	47	48	64
	Front left	26.6'/8.1m	47	49	64
	Rear right	33'/10.1m	57	59	80
	Rear left	26.6'/8.1m	47	48	64
	Modules front	8.9'/2.7m	16	17	21
	Modules rear	8.9'/2.7m	16	17	21

Section 4
Operation

Basic Operation

Unfolding:

1. Walk around and inspect the machine.
   a. Check that chains are not hooked on framework
   b. Check swivel bolts are in place and not broken
   c. Check that height adjusting chains have not fallen out of their slotted plates during transport.
2. Lower front A frame to working height.
3. Unfold wings holding the hydraulic lever until the tail is in working position and the main center cylinder pins have centerd in their slots.
4. Walk around and check that all chain links are straight and that working height of all swivels is correct for field conditions. Adjust if neccessary.
5. Move off with all chains in working position. If neccessary it is acceptabe to raise front A pull to transport height. This will lift the front chains off the ground and reduce the load on the tractor. Lower the front A pull once moving satisfactorily.

Folding:

1. Lower the front A frame to working height. (This is important to ensure that all chains locate correctly in their transport rests).
2. Fold the wings. They should move as follows; modules will raise, tail will raise, main center cylinders will retract, one or both, until the wings stand vertically. The left outer wing then the right outer wing will fold down.
3. Raise front A frame to transport height.
4. Walk around and check that chains have located correctly in transport rests.
   (30' only, install wing transport lock pins).

Setting for correct chain tension

Wings

Use the spanner supplied. Loosen the lock nut adjacent to the tensioner assembly body. Turn the tension bolt clockwise to compress the coil spring. Correct tension is acheived when spring retains its set length when operator rolls the chain fore and aft on the ground. Retighten the lock nut.
See table below

Spring Compression Length

Model	inches	mm
45	12.4	315

When less than 4" (100mm) of thread remains visible on the adjustor bolt then a link must be removed from the chain

Modules

Loosen the lock nut on the draw bolt.
Tighten the adjusting nut clockwise until the outer face of the spring retaining washer is flush with the body of the module tensioning unit.
Retighten the lock nut.
If more than 8" (200mm) of thread is exposed then a link should be removed to maintain correct adjustment.

Importance of chain tension

Operational

It is imperative that the correct adjustment be maintained. Only through correct adjustment can a smooth and level finish be achieved in field working.
Loose chains lead to :

- Uneven performance across the width of the machine
- Uneven weed control
- Unsatisfactory incorporation
- Ineffective levelling
- Accelerated or premature chain wear
- Chains failing to engage with transport locators when folded
- Machine damage when folding or unfolding
- Uneven field surface with ridges and furrows being created. The leading 1/3rd of a loose chain is much more aggressive than the trailing 1/3rd and the center. This will mean that middle of the machine's front pair of chains will aggressively move soil outwards. The machine's rear pair of chains, if loose, have their aggressive 1/3rd near the wing extremity. It follows then that as the front discs push soil outwards, the least aggressive portion of the rear chain follows them and does not balance the soil movement. This is exacerbated at the wings, effectively creating a broad ridge about halfway out each wing. It won't be evident in one pass, but is possible if care is not taken over time.

A correctly adjusted machine will not cause this phenomenon.

Settings for correct working height

To adjust the swivel height at the wings, relocate one of the polyurethane spacers either above or below the fixed mounting tube.

Adjustment

1	Loosen chain tension completely
2	Undo self tapping screw from corresponding spacer then prise open the spacer and spring it off of the drop leg tube
3	Replace it in the selected position after raising or lowering the drop leg
4	Reinstall the self tapping screw and re-tension the chain

It is possible to install all spacers either above or below the mounting tube giving a maximum of 4" (100mm) of adjustment.

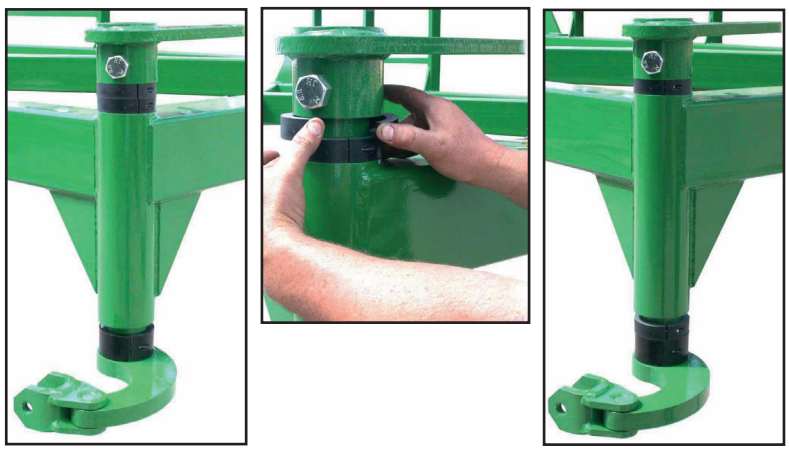

Front Cylinder Depth Stop

ITEM NO.	PART NUMBER	Revision	DESCRIPTION	QTY.
1	0211-12110SHSCREW	A	Shoulder Screw M12 x 16 x 110	2
2	0231-SPRINGCUP	A	Compression Cup Washer	7
3	0800-278	A	Cylinder Depth Stop Plate	10

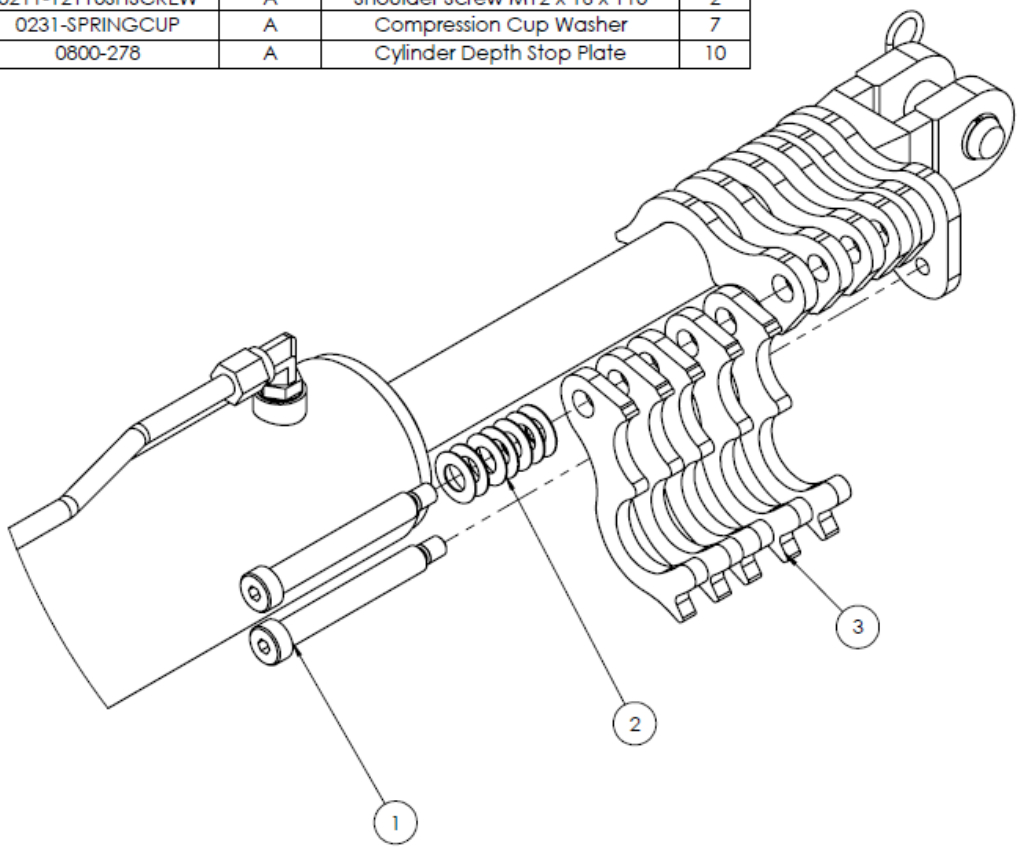

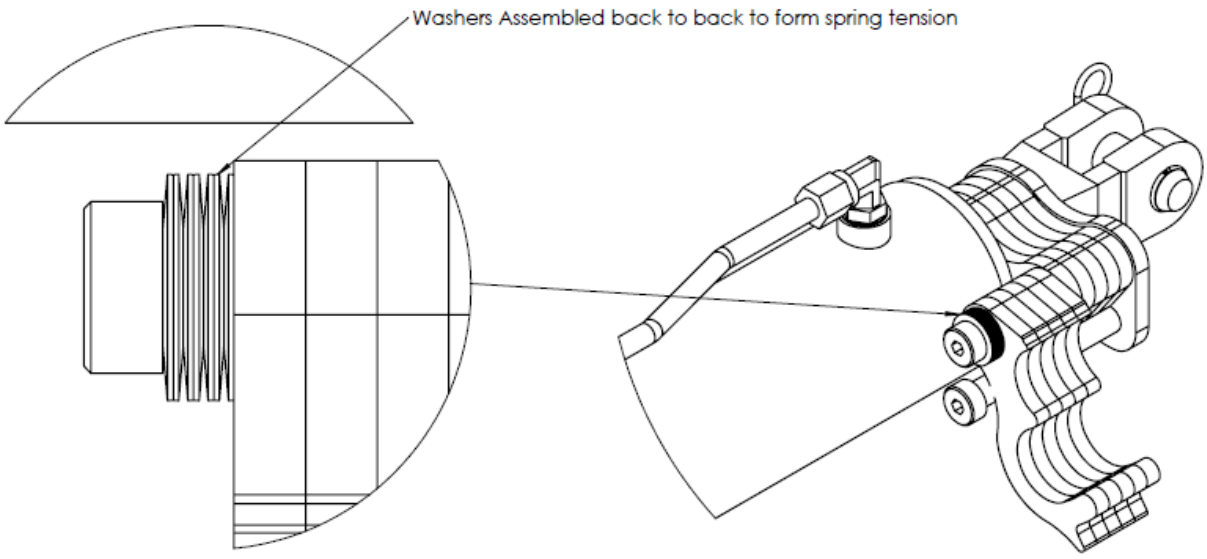

Hydraulic Valve Block

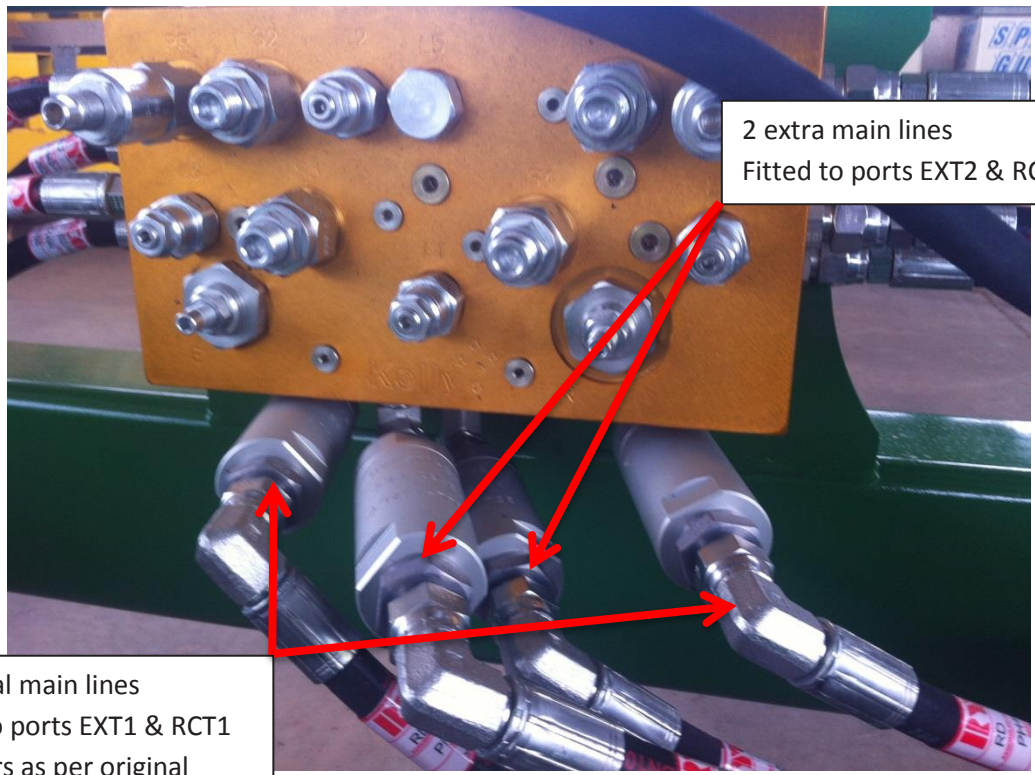

2 extra main lines
Fitted to ports EXT2 & RCT2

2 original main lines
Fitted to ports EXT1 & RCT1
Via filters as per original
OUT end of filter to valve block

Extra stack clamp added to mount extra main lines to existing main lines

New hose mount post with extra storage points

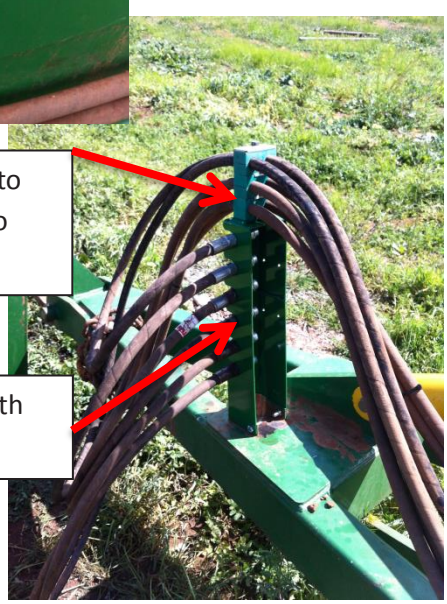

Rear Light Brackets

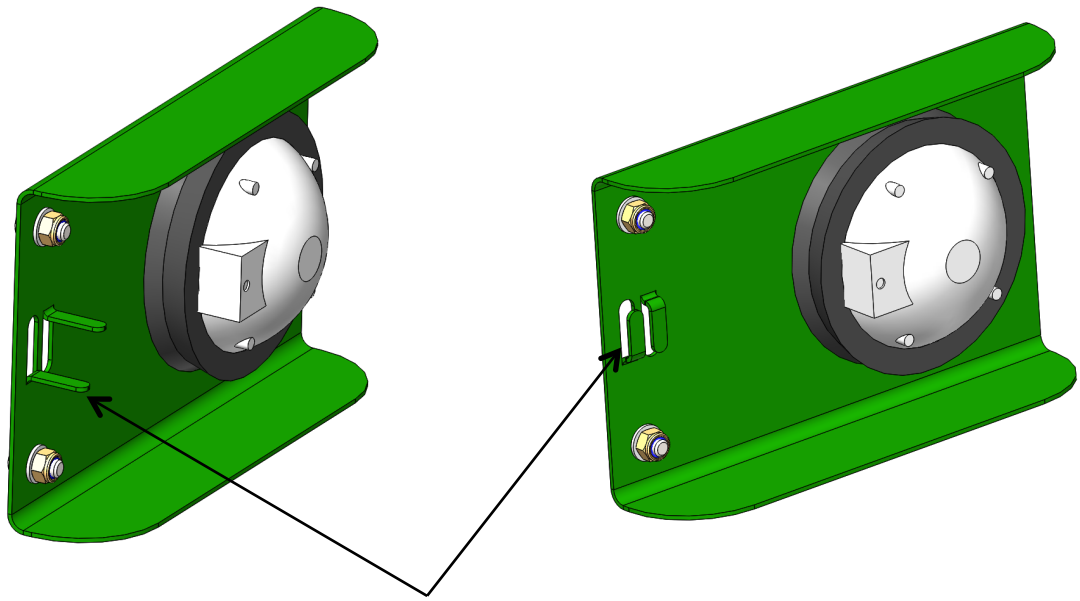

Please ensure to bend tabs up and feed wire through, so the light cable is secure

Mount to chain carrier with 2x M8x20 cup head bolts, Flat washer and Nylon nut

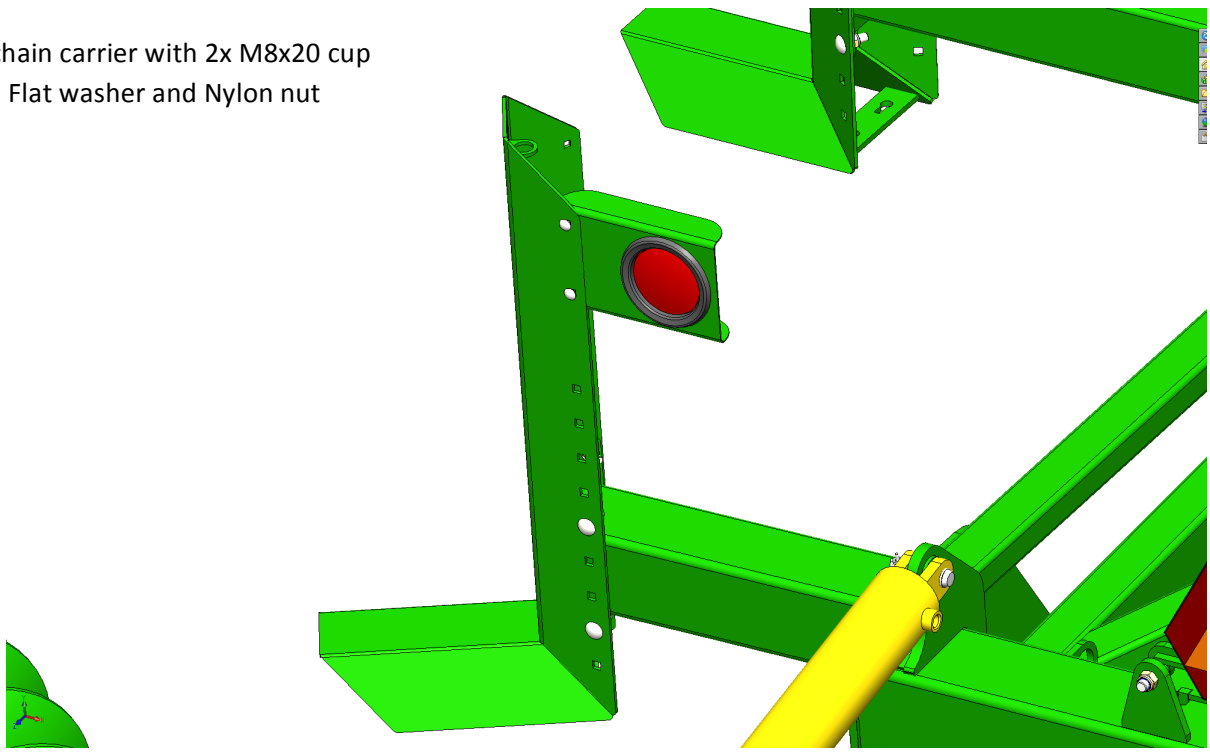

Chain Tensioners on Rear Tail

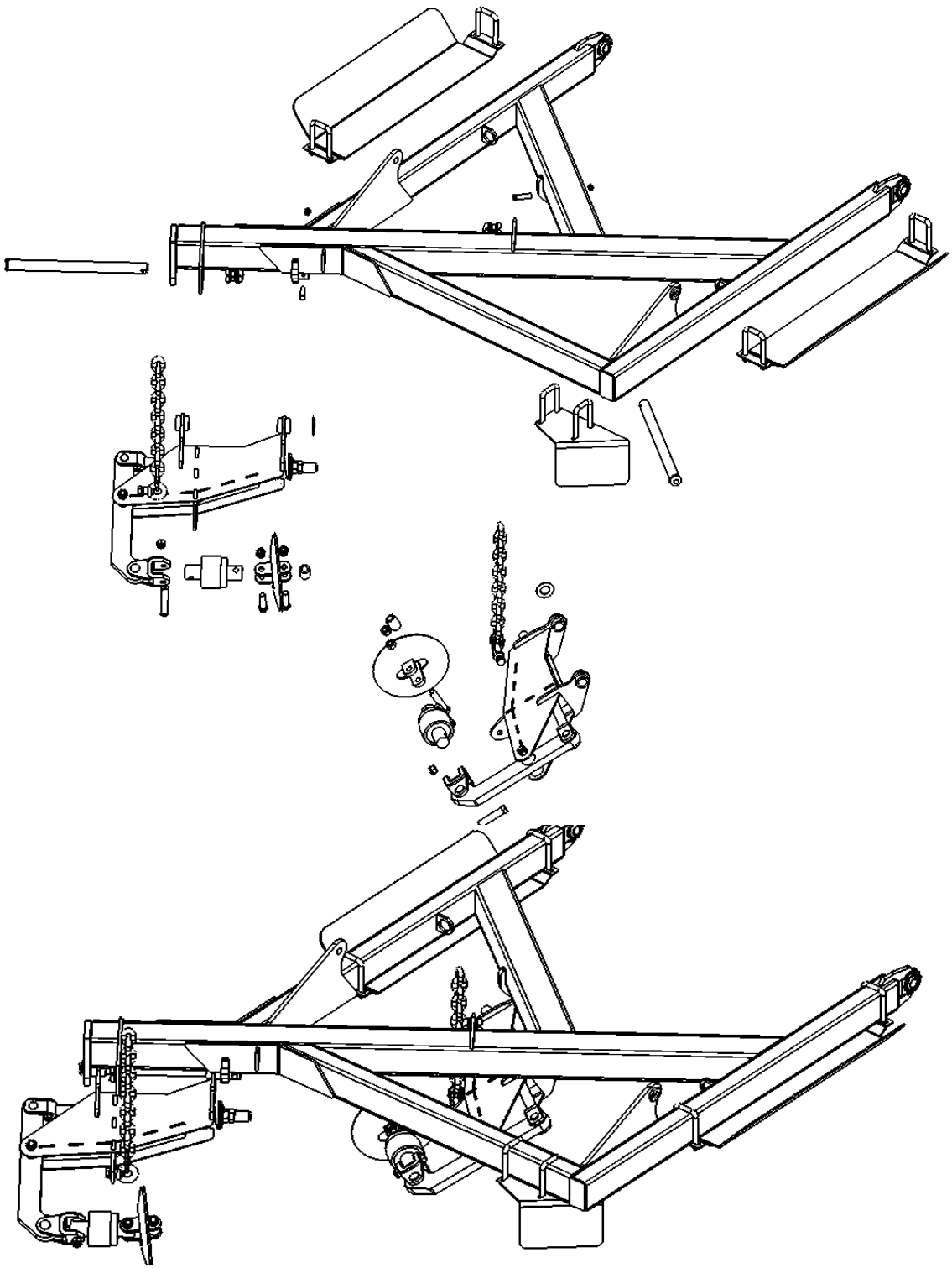

Chain Tensioners on Rear Tail

Top View of Rear tail

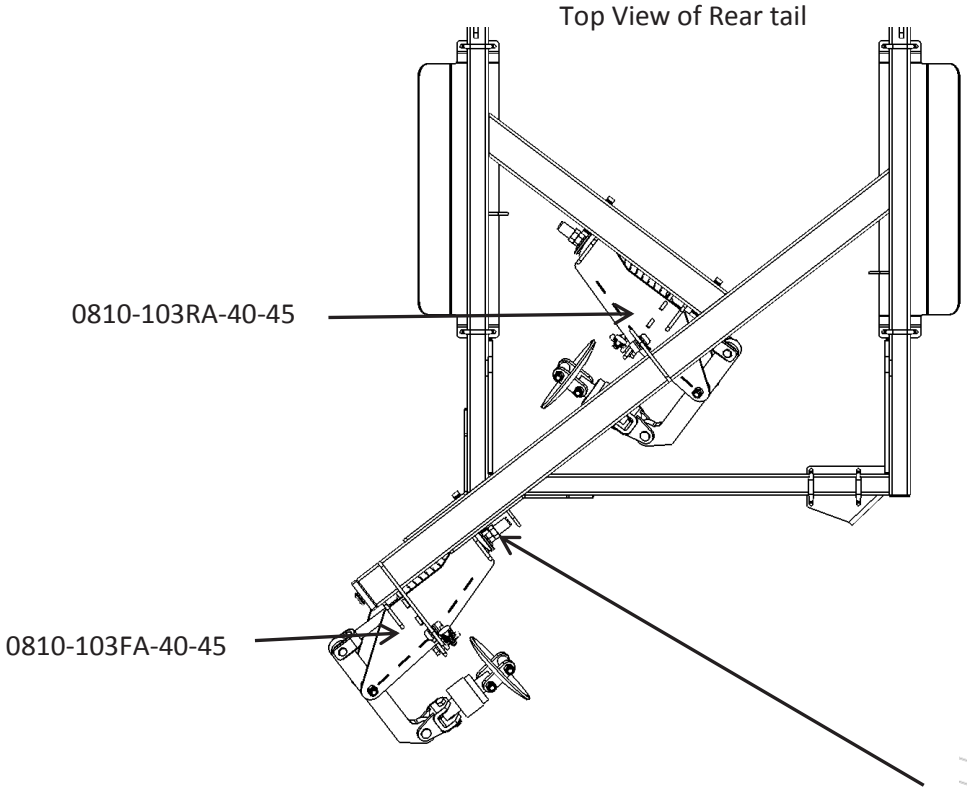

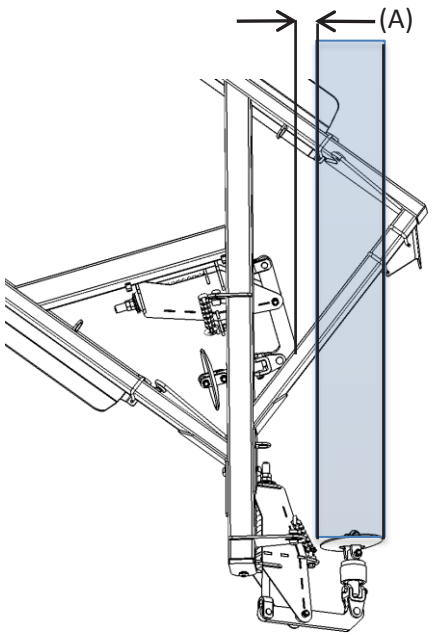

Caution- Do not let arm protrude back in line with the RHR chain as it may interfere with the chain.

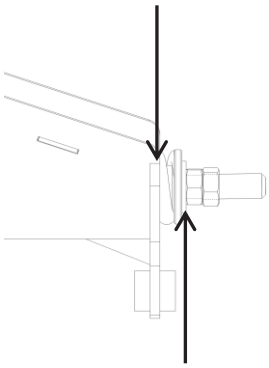

Tighten adjusting bolt until outer face of the spring retaining bush is flush with end of the tension box.

(A) -Ensure chain length and tension is correct.

-Tighten wing adjustor to provide clearance at (A)

Chain Tensioners on Rear Tail

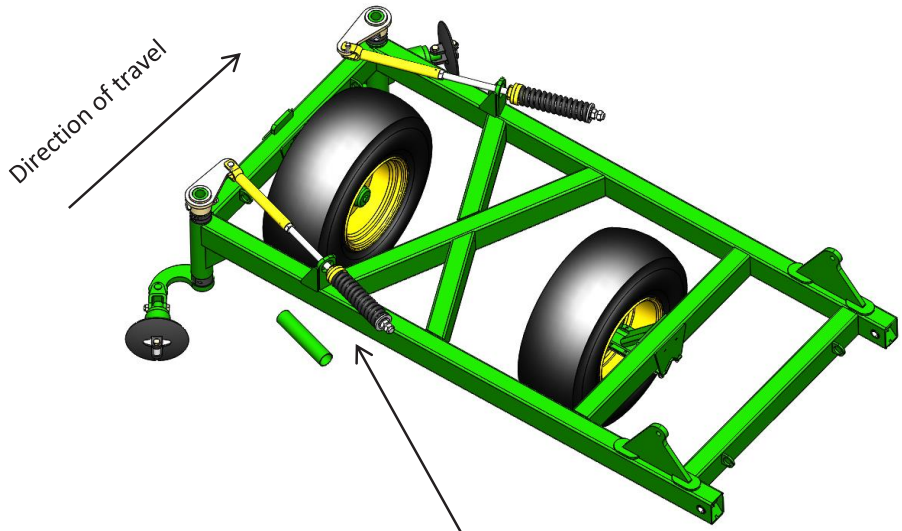

Please note-Exchange the spring for Part no 0801-PCHTA-FB, on rear of both outer wings only.

When fitting the Chain tension boxes on the rear tail the outer wing drop leg becomes fixed. The existing spring is used on the tension box on the rear tail.

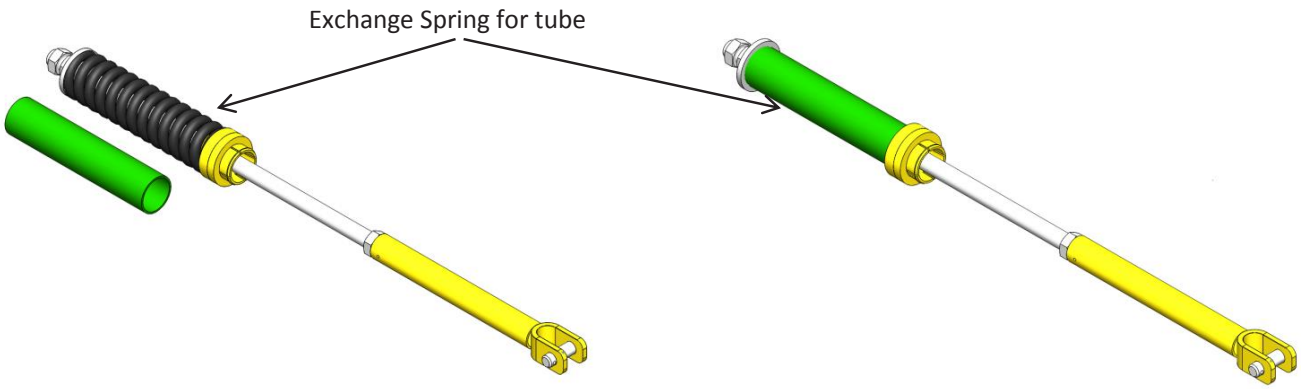

Bolt on Axel

Please note this is on centre frame and outer wings only.

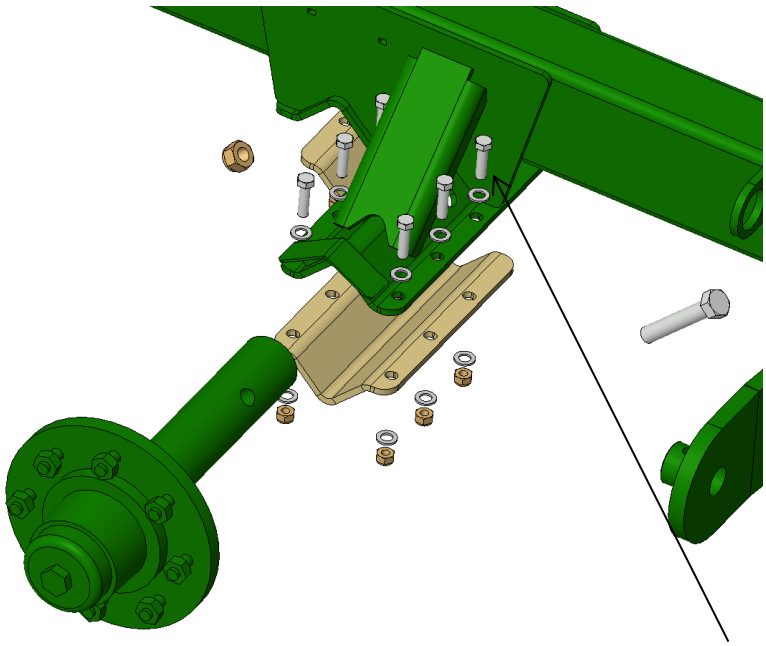

Axels are clamped with six M12x45mm with a nyloc nut and a flat washer both sides, As well as the main bolt M20 x120mm with a nyloc nut for the main axel bolt.

Please note that all slotted holes use flat washes

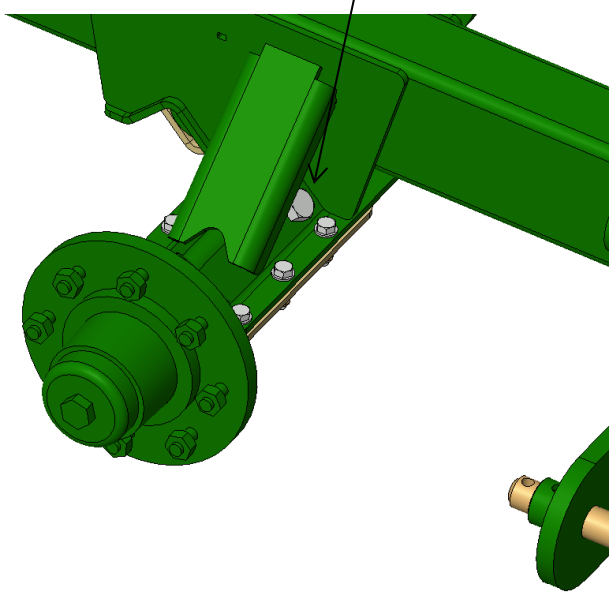

Brake Disc Collar (Revision B)

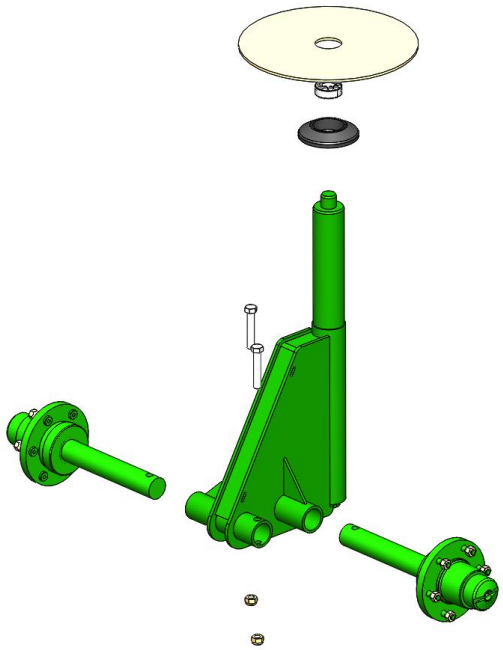

Slide shaft of jockey wheel up through both bearings.

Place black dust cover onto top bearing.

Slide disc brake into the calliper and over the top of jockey wheel.

Ensure when unscrewing bolts to fit collar over that some thread is still engaged otherwise you will not be able to screw bolt in.

Slide collar over shaft and inside the brake disc hole.

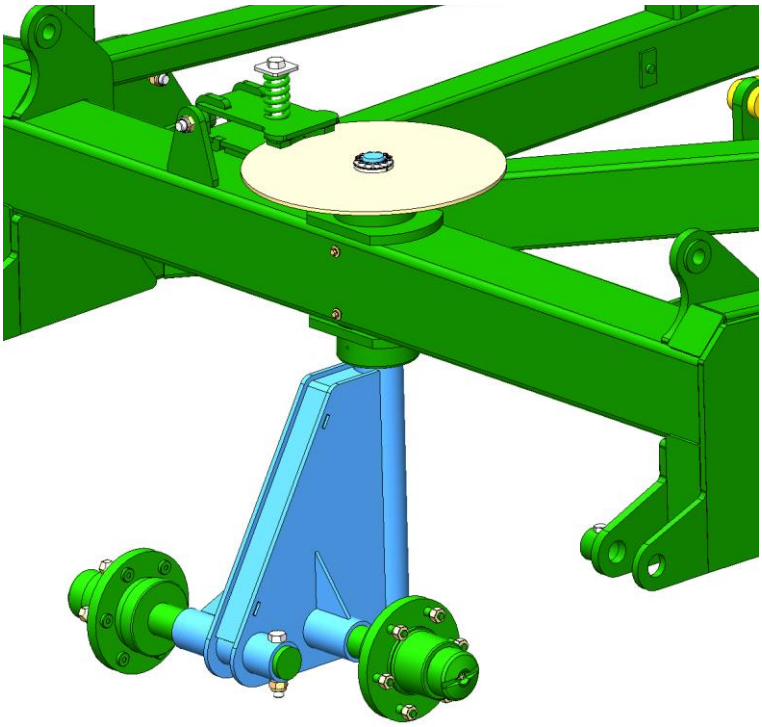

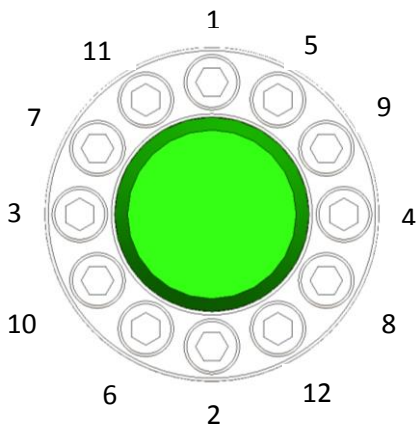

Tighten in a cross pattern, Bring all bolts up equally to 17Nm (12.54 Ft/Lbs) (caution if a single bolt is done up to tension there is a risk of the bolt breaking)

To undo, remove all bolts and gently tap collar with a hammer and collar should become loose.

Correct Hose Attachment

Please note that when attaching hoses to sequence valve block to check that hoses are connected to the correct port.

Ports with CE, LE or RE are extend ports (the E denotes Extend) and hoses connected to these must go to the rear end of the cylinder.

Ports with CR, LR or RR are retract ports (the R denotes Retract) and hoses connected to these must go to the rod end of the cylinder.

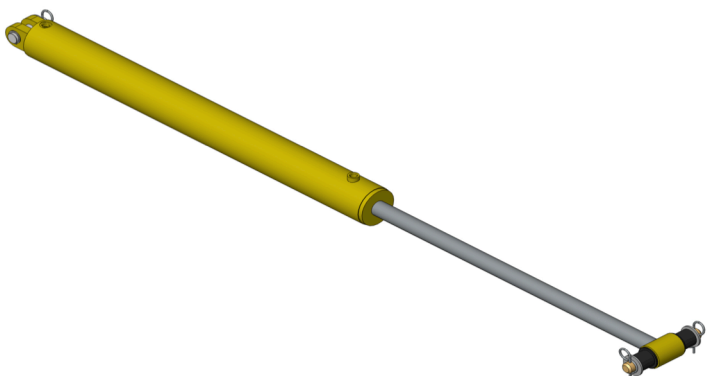

Thank you for choosing a Kelly Engineering product

We hope this manual proved to be clear and easy to follow, however feel free to contact our company for customer support.

Parts can be purchased when required through your local dealer, or by contacting either Kelly Engineering in Australia or in the US, Hood & Company Inc.

Kelly Engineering
Phone: + 61 8 8667 2253
Fax: + 61 8 8667 2250
Email: office@kellyengineering.com.au
Website (Australia): www.kellyengineering.com.au
Website (US): www.kellyharrows.com

Hood & Company Inc Springfield MO
Phone: 417 865 2100
Fax: 417 865 2105
Email: hoodco@hoodco.com